CARTEK®

CATÁLOGO DE FLECHAS COMPLETAS 100% NUEVA 2015-2016

CÁTALOGO DE FLECHAS COMPLETAS

CARTEK® AUTOPARTES

www.cartek.com.mx

EN NUESTRA PÁGINA ENCONTRARÁS

• BÚSQUEDA ESPECIALIZADA DE AUTOPARTES CARTEK®

• DESCARGAS CARTEK® AUTOPARTES

Table of Contents

Information Sections:	
Axle Information	Pages 1-3
Buyer's Guide	Pages 49-65
Axle Specifications	Pages 66-75

Applications:			
Make	**Page**	**Make**	**Page**
Acura	4	Jeep	22
AM General	4	Kia	23
AMC	4	Land Rover	24
Audi	4	Lexus	24
BMW	6	Lincoln	24
Buick	7	Mazda	25
Cadillac	8	Mercedes	26
Chevrolet	9	Mercury	27
Chevrolet Trucks	11	Mini	28
Chrysler	12	Mitsubishi	28
Daewoo	13	Nissan	29
Daihatsu	13	Oldsmobile	31
Dodge	13	Plymouth	32
Eagle	15	Pontiac	33
Fiat	16	Porsche	35
Ford	16	Saab	35
Geo	17	Saturn	35
GMC Trucks	18	Scion	36
Honda	19	Subaru	36
Hummer	20	Suzuki	39
Hyundai	20	Toyota	39
Infiniti	21	Volkswagen	41
Isuzu	21	Volvo	47
Jaguar	22		

CHRYSLER, DODGE, PLYMOUTH

INTERCHANGEABLE AXLE ASSEMBLIES

Chrysler Corporation has used four different manufacturers for drive axle assemblies on their front wheel drive vehicles. Although the appearance of the axles is different between the four manufacturers, they are completely interchangeable with each other. The different styles are illustrated below.

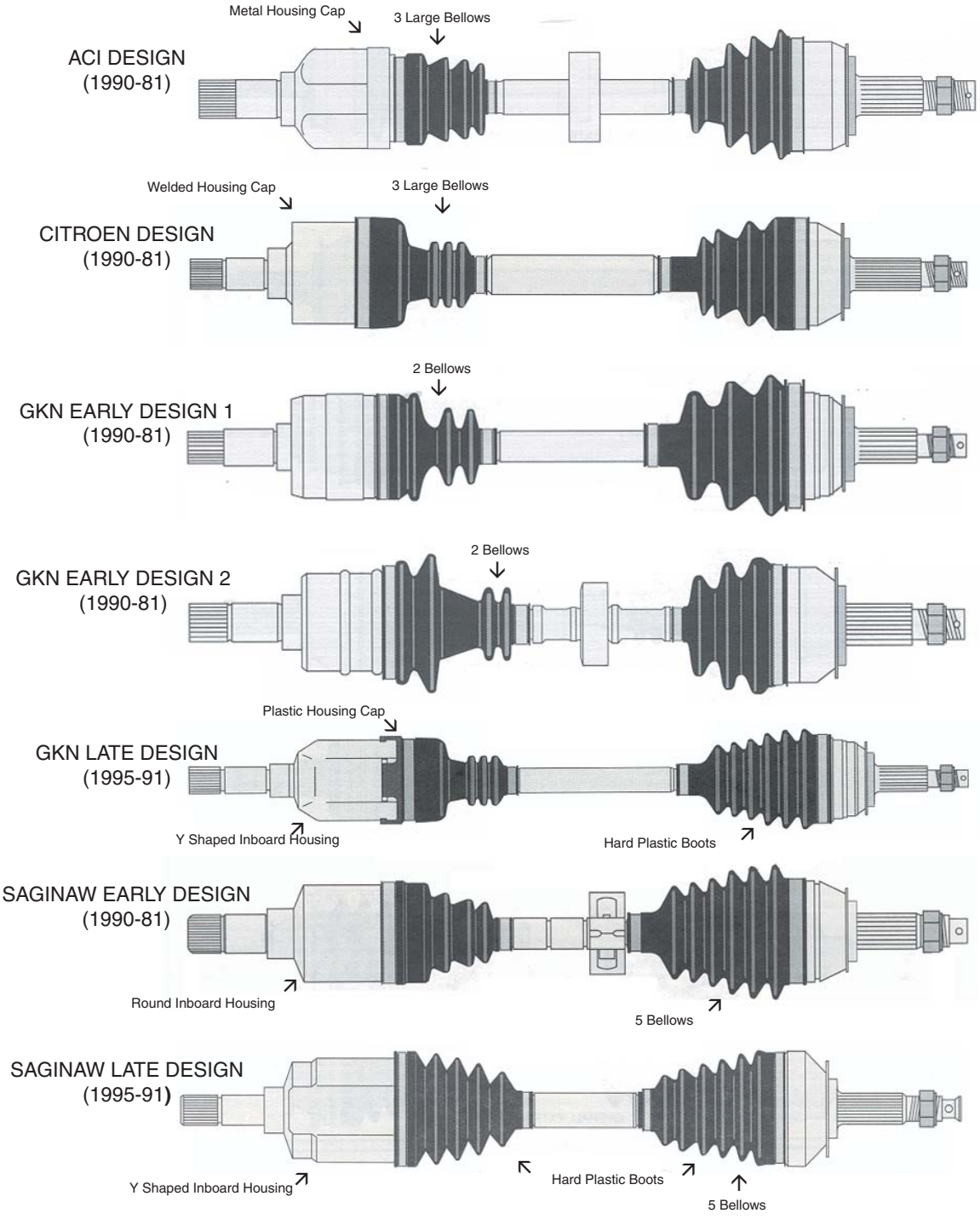

CHRYSLER, DODGE, PLYMOUTH

AXLE SYSTEM AND INTERMEDIATE SHAFT

VERIFY WHICH STYLE IS ON THE RIGHT (PASSENGER) SIDE OF VEHICLE

w/Intermediate Shaft

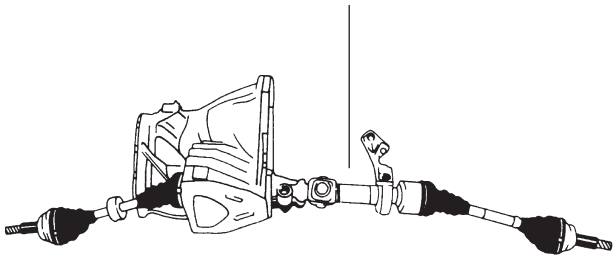

wo/Intermediate Shaft

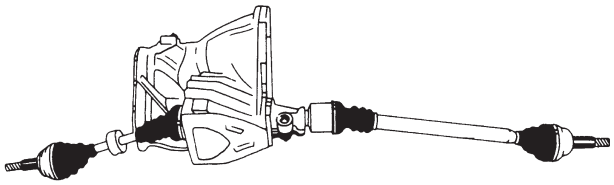

ISUZU
AMIGO, PICK UP, RODEO, TROOPER

IDENTIFYING “NTN” AND “NSK” STYLE AXLE HOUSINGS

“NTN” Style Ribbed Cylinder Housing	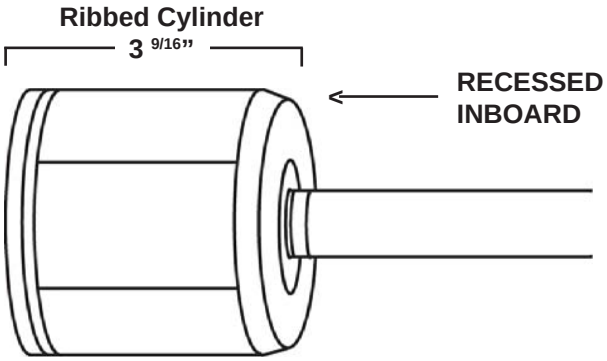
“NSK” Style Smooth Cylinder Housing	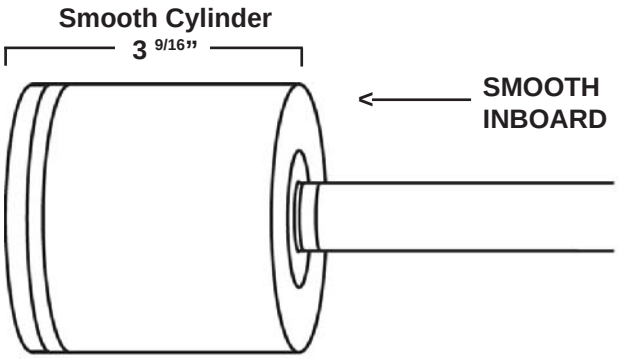

ANTI-LOCK BRAKE SYSTEMS (ABS)

EXCITER RING LOCATION

PLEASE NOTE: Vehicles that are ABS equipped, may or may not have an ABS exciter ring installed on the outer joint. If the vehicle is equipped with ABS and the axle does not have an ABS ring, then the ring is built into the rotor/hub.

This catalog list axles with and without ABS rings. Please check your specific application before ordering.

ABS RING ON AXLE

ABS RING ON ROTOR

GENERAL MOTORS

OUTER JOINT IDENTIFICATION

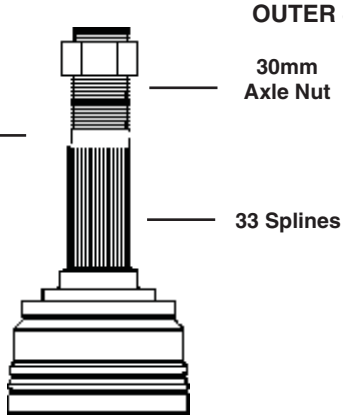

LIGHT DUTY

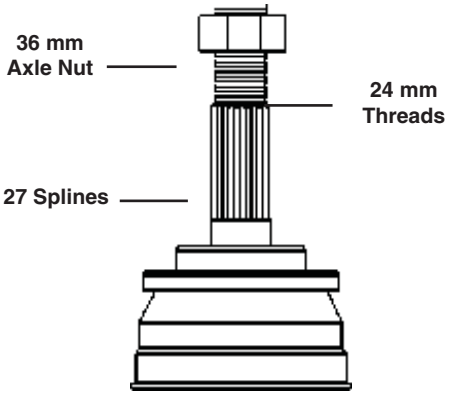

HEAVY DUTY

ACURA

Legend models up to1990 may have a full spline or a half spline joint

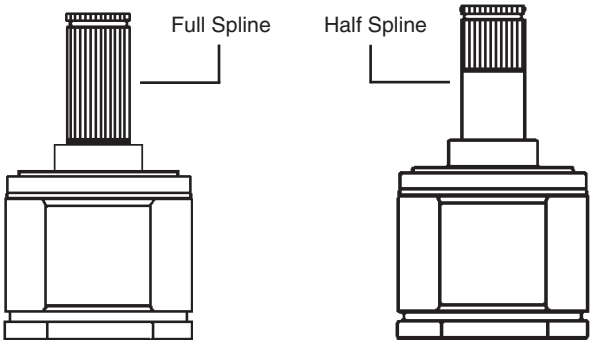

NISSAN

Verify which style inner joint is on left (drivers) side axle.

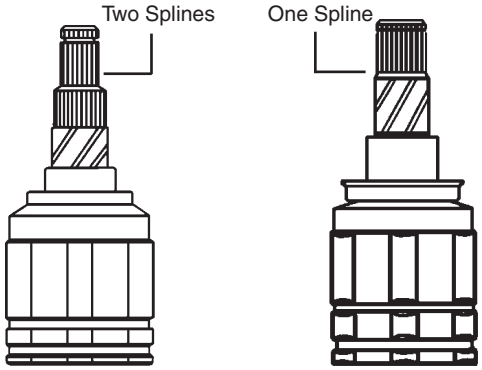

w/Locking Differential

w/Non-Locking Differential

Acura

CL		LR	RR	LF	RF
2001-03	All	71492	71494	91501	91502
1998-99	L4-2.3L MT			91507	91504
1998-99	L4-2.3L AT			91503	91504
1997-99	V6-3.0L			91509	91510
1997	L4-2.2L MT			91507	91504
1997	L4-2.2L AT			91503	91504

CSX		LR	RR	LF	RF
2007-11	MT			91152	91237

EL		LR	RR	LF	RF
2001-05	All engines MT			91521	91522
2001-05	All engines AT			91511	91528

Integra		LR	RR	LF	RF
1994-01	All engines			94501	94502
1990-93	All engines			94503	94502
1986-89	All engines			94571	94572

Legend		LR	RR	LF	RF
1991-95	All engines			94507	94508
1989-90	All engines			94509	94510
1986-88	All engines			94509	94509

MDX		LR	RR	LF	RF
2010-14	All AWD			94432	94430
2007-09	All engines AWD			91110	91112
2003-06	All engines AWD			94523	94424
2001-02	All engines AWD			94527	91212

RDX		LR	RR	LF	RF
2007-12	All engines AWD			94212	94211

RL		LR	RR	LF	RF
2005-08	All engines			91106	91108
1996-04	All engines			94411	94512

RSX		LR	RR	LF	RF
2002-06	All engines MT; Type S			94517	94418
2002-06	All engines AT; Base			94513	94414

SLX		LR	RR	LF	RF
1996-99	All engines 4WD; w/o inboard joint			40046	40046
1996-99	All engines; complete axle			96575	96575
1996-99	All engines; w/o inboard joint			40046	40046

TL		LR	RR	LF	RF
2009-12	All AT			94213	94479
2007-08	V6-3.5L AT			36001	91472
2007-08	All engines MT			91571	91514
2004-06	All engines MT			91571	91514
2004-06	All engines AT			91571	91472
1999-03	All engines			91501	91502
1996-98	V6-3.2L			94411	94512
1996-98	L5-2.5L			94519	94420

TL cont.		LR	RR	LF	RF
1995	All			94519	94420

TSX		LR	RR	LF	RF
2010-12	AT			91373	91175
2009-12	L4 2.4L ALL			91008	91370
2004-08	All engines			94573	94474

Vigor		LR	RR	LF	RF
1992-94	All engines			94521	94422

ZDX		LR	RR	LF	RF
2010-13	AWD			94432	94430

AM General

Hummer		LR	RR	LF	RF
1992-01	All engines	74975	74975		

AMC

Eagle		LR	RR	LF	RF
1980-88	All engines			74976	74976

Audi

100		LR	RR	LF	RF
1992-94	All engines AT w/ CDT Trans.			77929	77930
1989-91	All engines AT			77801	77802

100 Quattro		LR	RR	LF	RF
1992-94	All engines AT			77929	77930

5000		LR	RR	LF	RF
1980-88	All engines AT			77803	77804

90		LR	RR	LF	RF
1993-95	"AT, FWD"			77281	77283

90 Quattro		LR	RR	LF	RF
1990-95	All				77008

A3		LR	RR	LF	RF
2006-13	L4-2.0L			75972	75104

A3 Quattro		LR	RR	LF	RF
2007-13	All			75972	75990

Continued on next page

Audi cont.

A4		LR	RR	LF	RF
2009-13	All			77547	77547
2005-08	All CVT			77909	77909
2002-08	MT			77919	77920
2002-04	V6-3.0L MT			77911	77912
2002-04	V6-3.0L AT			77909	77909
2002-04	L4-1.8L AT			77909	77909
2001	V6-2.8L MT			77923	77924
2001	V6-2.8L AT			77921	77922
2001	L4-1.8L AT			77913	77914
1997-01	L4-1.8L MT; 33 outboard spline			77811	77812
1997-01	L4-1.8L MT; 38 spline outboard joint			77163	77523
1997-00	V6-2.8L MT			77923	77924
1997-00	V6-2.8L AT			77921	77922
1997-00	L4-1.8L AT			77913	77914
1996	V6-2.8L MT			77923	77924
1996	V6-2.8L AT			77921	77922

A4 Quattro		LR	RR	LF	RF
2009-12	All engines			77547	77547
2007-09	V6-3.2L AT			77903	77904
2007-09	V6-3.2L AT Convertible	77500	77500	77903	77904
2007-09	L4-2.0L AT Convertible	77500	77500	77901	77902
2007-09	L4-2.0L AT			77901	77902
2007-08	L4-2.0L MT	77500	77500	77907	77908
2006-08	L4-2.0L AT	77500	77500	77901	77902
2005-08	AT			77903	77904
2005-06	"L4-1.8L, L4-2.0L" MT	77500	77500	77907	77908
2003-04	V6-3.0L MT	77500	77500	77911	77912
2003-04	V6-3.0L AT	77500	77500	77909	77904
2002-04	L4-1.8L MT			77907	77908
2002-04	L4-1.8L AT; from Ch #8E-3-134-001	77500	77500	77909	77904
2002	V6 3.0L MT; Trans Code FTZ			77248	77246
2002	L4-1.8L MT; From Chassis # 8E2120000			77923	77924
2001	V6-2.8L MT			77809	77810
2001	V6-2.8L AT			77917	77918
1997-01	L4-1.8L MT			77807	77808
1997-01	L4-1.8L AT			77913	77914
1997-01	All engines	77805	77805		
1997-00	V6-2.8L MT			77809	77810
1997-00	V6-2.8L AT			77917	77918
1996	All engines MT			77809	77810
1996	All engines AT			77917	77918
1996	All engines	77805	77805		

A5 Quatro		LR	RR	LF	RF
2008-12	All engines; To 8/13/12			77547	77547

A6		LR	RR	LF	RF
2006-10	V6-3.2L "AT, CVT Transmission"; FWD			77263	77261

A6 cont.		LR	RR	LF	RF
2002-04	V6-3.0L w/CVT (code FSB)			77125	77125
1999-01	All engines			77927	77928
1998	All engines AT; to Ch #4AW-005000			77929	77930
1995-97	All engines AT			77929	77930

A6 Quattro		LR	RR	LF	RF
2005-11	All engines AT			77153	77155
2002-04	V6-3.0L AT	77521	77521	77927	77928
2002	AWD			77927	77525
2001	V6-2.8L MT			77924	77313
2000-04	V8-4.2L AT	77519	77519	77103	77104
2000-04	V6-2.7L AT	77519	77521	77927	77928
1999-01	V6-2.8L AT			77927	77928
1998	V6-2.8L AT; to Ch #4A-W-005000			77929	77930
1998	V6-2.8L AT; from Ch #4B-W-005000			77927	77928
1995-97	V6-2.8L AT			77929	77930

A8		LR	RR	LF	RF
1997-99	V8-3.7L			77931	77928

A8 Quattro		LR	RR	LF	RF
2007-09	V8-4.2L				77347
2005-09	W12-6.0L			77331	77333
2000-04	V8-4.2L			77107	77104
1997-03	All engines			77931	77928

Allroad		LR	RR	LF	RF
2004-05	V8-4.2L AT			77103	77104
2004-05	V6-2.7L AT			77107	77108
2003	8 Cyl AT			77103	77104
2001-05	All MT			77111	77112
2001-03	AT			77107	77108

Cabriolet		LR	RR	LF	RF
1994-98	All engines			77281	77283

Coupe Quattro		LR	RR	LF	RF
1990-91	All				77008

Fox		LR	RR	LF	RF
1973-79	All engines MT			75805	75805

Q7		LR	RR	LF	RF
2007-10	All Engines			50110	50110

RS4		LR	RR	LF	RF
2007-08	All engines			77919	77920

RS6		LR	RR	LF	RF
2003-04	All engines	77519	77519	77103	77104

Continued on next page

Audi cont.

S4		LR	RR	LF	RF
2010-13	All			77547	77547
2006-09	All engines MT			77919	77920
2004-09	All engines AT	77500	77500	77903	77904
2004-05	All engines MT	77500	77500	77919	77920
2000-02	All engines MT			77163	77523
2000-02	All engines AT			77921	77922
2000-02	All engines	77805	77805		

S5		LR	RR	LF	RF
2008-09	All engines			77547	77547

S6		LR	RR	LF	RF
2007-10	All			77057	77059
2002-03	All engines AT			77103	77104
2002-03	AWD	77519	77519		

S8		LR	RR	LF	RF
2007-09	All AWD			77331	77333
2001-03	All engines; Before 9/03			77931	
2001-03	All engines; Before 9/02			77931	77928

TT		LR	RR	LF	RF
2003-06	4 Cyl MT			77117	77118
2003-06	4 Cyl AT			77117	77118
2003	All engines MT			77117	77118
2003	All engines AT			77117	77118
2002	All engines; w/o 18" wheels			75973	75974
2000-01	All engines; w/o 18" wheels			75973	75974

TT Quattro		LR	RR	LF	RF
2005-06	L4-1.8L; "Except w/18"" wheels"			75971	77972
2004	V6-3.2L			77113	77114
2004	L4-1.8L			75971	77972
2002-03	All engines; "w/ 16"" & 17"" wheels"			77973	77974
2002-03	All engines; "w/ 18"" wheels"			75971	77972
2000-01	All engines			77973	77974

BMW

"323Ci, 323i, 323is"		LR	RR	LF	RF
1998-00	All	78901	78902		

"328, 328Ci, 328i, 328is"		LR	RR	LF	RF
2007-12	All	78901	78902		
1999-00	All	78901	78902		
1996-98	All	78901	78901		

"328, 328Ci, 328i, 328is, "		LR	RR	LF	RF
2007-12	All	78901	78902		
1999-00	All	78901	78902		
1998	All	78901	78901		

"328i xDrive, 328xi"		LR	RR	LF	RF
2007-12	All			78103	78104

"525xi, 530xi" cont.		LR	RR	LF	RF
2006	w/AT From 11/05	78108	78108		
2006	w/AT Before 10/05	78108	78108		
2006	All engines			78117	
2006	MT	78108	78108		

128i		LR	RR	LF	RF
2008-12	All	78901	78902		

318i		LR	RR	LF	RF
1993-98	All engines	78905	78905		
1991-92	All	78906	78906		
1984-85	All engines	78906	78906		

318is, 318ti		LR	RR	LF	RF
1993-98	All engines	78905	78905		
1992	All	78905	78905		
1991	All engines	78906	78906		

325		LR	RR	LF	RF
2001-05	MT	78901	78902		
2001-05	AT	78906	78102		
1996-97	All	78906	78102		
1992-95	"Except 325e, 325iC"	78901	78901		
1992-93	325iC	78906	78906		
1984-91	All engines	78906	78906		

325CI		LR	RR	LF	RF
2006	All engines	78901	78902		

325I		LR	RR	LF	RF
2006	All engines	78901	78902		

325XI		LR	RR	LF	RF
2006	AT	78107	78108		
2006	ALL			78103	78104
2006	MT	78108	78108		
2001-05	All engines AT			78111	78112
2001-05	AT	78580		78111	78112

330i		LR	RR	LF	RF
2006	Sedan w/AT From 1/06		78108	78107	
2006	MT Sdn	78108	78108		
2001-05	w/AT Before 12/05	78113	78114		

330XI		LR	RR	LF	RF
2006	Sedan w/MT	78108	78108		
2006	Sedan w/AT From 1/06	78107	78108		
2006	All			78103	78104
2001-05	All engines	78580		78111	78112

335xi		LR	RR	LF	RF
2007-08	All			78103	78104

525i		LR	RR	LF	RF
2004-06	All engines	78108	78108		
2001-03	All engines	78106	78106		

525xi		LR	RR	LF	RF
2006-07	All			78117	78118

Continued on next page

BMW cont.

528i		LR	RR	LF	RF
1999-00	All	78106	78106		
1997-98	All	78106	78106		

528i xDrive		LR	RR	LF	RF
2009-10	All			78117	78118

528xi		LR	RR	LF	RF
2008	All			78117	78118

530i		LR	RR	LF	RF
2004-06	All engines	78108	78108		
2004-06	All	78108	78108		
2001-03	All	78106	78106		

530xi		LR	RR	LF	RF
2006-07	All			78117	78118

535i xDrive		LR	RR	LF	RF
2009-10	All			78117	78118

535xi		LR	RR	LF	RF
2008	All			78117	78118

540i		LR	RR	LF	RF
1997-03	All engines MT	78115	78115		
1997-03	All engines AT	78975	78975		

M3		LR	RR	LF	RF
2001-06	All engines	78903	78904		
1995-99	All engines	78915	78915		
1988-91	All engines	78906	78906		

M5		LR	RR	LF	RF
2000-03	All engines	78975	78975		

X3		LR	RR	LF	RF
2004-08	All engines			78121	78122

X5		LR	RR	LF	RF
2007-12	All			78084	78086
2002-06	All			78571	78572
2000-02	From 04/2000			78571	78572

X6		LR	RR	LF	RF
2008-12	All			78084	78086

Z3		LR	RR	LF	RF
1999-00	All engines	78901	78901		

Z4		LR	RR	LF	RF
2006	L6-3.2L	78903	78904		
2006	L6-3.0L MT	78901	78902		
2003-05	All	78901	78902		

Buick

Allure		LR	RR	LF	RF
2010	All			70314	
2008-09	V8-5.3L (335)			70203	72354
2008-09	V6-3.8L (231)			70271	70572
2005-07	V6-3.8L (231)			70271	70572

Century		LR	RR	LF	RF
2000-05	All engines			70271	70572

Century		LR	RR	LF	RF
1997-99	All engines			70273	70572
1994-96	All engines "AT, 4 speed"			70279	70580
1994-96	All engines "AT, 3 speed"			70277	70578
1990-93	All engines "AT, 4 speed"			70283	70584
1990-93	All engines "AT, 3 speed"			70281	70502
1984-89	All engines "AT, 4 speed"; "20MM Thread, 30MM Nut"			70289	70590
1984-89	All engines "AT, 4 speed"; "24MM Thread, 36MM Nut"			70283	70584
1982-89	All engines "AT, 3 speed"; "20MM Thread, 30MM Nut"			70283	70588
1982-89	All engines "AT, 3 speed"; "24MM Thread, 36MM Nut"			70281	70502

Electra		LR	RR	LF	RF
1985-90	All engines			70201	70502

Enclave		LR	RR	LF	RF
2008-12	All AWD & FWD; w/o intermediate shaft				70380
2008-09	Complete Axle			72304	72306

LaCrosse		LR	RR	LF	RF
2010-14	All			70314	70312
2008-09	V6-5.3L			70203	72354
2005-09	All			70271	70572

LeSabre		LR	RR	LF	RF
2000-05	All engines			70271	70573
1998-99	All engines; w/3.05 Axle Ratio (F83)			70203	70594
1998-99	All engines; w/2.86 Axle Ratio (FQ3)			70203	70572
1997	All engines; "3.06 gear ratio, except WA2 (LeSabre timing)"			70291	70594
1997	All engines; "3.06 gear ratio, WA2 (LeSabre timing)"			70291	70594
1997	All engines; w/2.84 Axle Ratio (F17)			70291	70572
1996	All engines; 3.06 gear ratio			70291	70594
1996	All engines; 2.84 gear ratio (F17)			70291	70572
1992-95	All engines			70291	70594
1986-91	All engines			70201	70502

Lucerne		LR	RR	LF	RF
2009-11	V8-4.6L (281)			70285	70285
2009-11	V6-3.9L (237)			70297	70573
2006-08	V8-4.6L (281)			70285	70285
2006-08	V6-3.8L (231)			70271	70573

Continued on next page

Buick cont.

Park Ave		LR	RR	LF	RF
2000-05	V6-3.8L W/Supercharger			70297	70574
2000-05	V6-3.8L Naturally Aspirated			70271	70573
1997-99	V6-3.8L W/Supercharger			70271	70574
1997-99	All engines Naturally Aspirated			70271	70573
1996	V6-3.8L Naturally Aspirated; 2.84 gear ratio (F17); w/o supercharger			70291	70594
1996	V6-3.8L W/Supercharger			70291	70592
1996	All engines; 3.06 gear ratio (FW2)			70291	70572
1995	V6-3.8L W/Supercharger; supercharger			70291	70572
1995	All engines; 3.06 gear ratio (FW2)			70291	70594
1995	All engines; 2.84 gear ratio (F17); w/o supercharger			70291	70572
1992-94	V6-3.8L Naturally Aspirated			70291	70594
1991-94	V6-3.8L W/Supercharger; supercharger			70291	70572
1991	V6-3.8L Naturally Aspirated; 33 outboard spline			70291	70594
1991	V6-3.8L Naturally Aspirated; 27 outboard spline			70201	70502

Rainier		LR	RR	LF	RF
2004-07	All engines			70575	70575

Reatta		LR	RR	LF	RF
1991	All engines			70207	70603
1988-90	All engines			70207	70508

Regal		LR	RR	LF	RF
2011-14	All			70314	70312
1998-04	All engines Naturally Aspirated			70271	70572
1997-04	V6-3.8L W/Supercharger			70271	70592
1997	V6-3.8L Naturally Aspirated			70273	70572
1993-96	All engines			70209	70510
1988-92	All engines			70209	70511

Rendezvous		LR	RR	LF	RF
2006-07	All engines FWD			70297	70572
2005	V6-3.6L FWD			70297	70572
2005	V6-3.4L FWD			70299	70591
2004-06	V6-3.6L AWD	70275	70275	70299	70676
2002-04	V6-3.4L AWD	70275	70275	70299	70676
2002-04	FWD			70299	70591

Riviera		LR	RR	LF	RF
1998-99	All engines			70271	70574

Riviera cont.

		LR	RR	LF	RF
1997	All engines; w/o supercharger			70271	70574
1997	All engines; w/o supercharger			70271	70573
1996	All engines; w/o supercharger			70273	70574
1996	All engines;			70271	70573
1995	All engines			70273	70573
1992-93	All engines			70291	70572
1991	All engines			70207	70603
1989-90	All engines			70207	70508
1986-88	All engines			77285	
1986-88	All engines			70201	70502
1979-85	All engines			70971	70972

Skyhawk		LR	RR	LF	RF
1987	MT Turbo			70597	70102
1982-89	All engines MT (Except 1987 Turbo)			70597	70598
1982-89	All engines AT			70582	70582

Skylark		LR	RR	LF	RF
1998	All engines W/4 Spd AT			70211	70512
1994-97	All engines "AT, 4 speed"			70211	70512
1988-95	All engines "AT, 3 speed"			70293	70672
1988-91	All engines "AT, w/o ABS"			70202	70582
1986-87	All engines AT			70202	70582
1986-87	All engines MT			70597	70598
1980-85	All engines MT			70597	70674
1980-85	All engines "AT, w/o ABS"			70202	70588

Somerset		LR	RR	LF	RF
1986-87	All engines MT			70597	70598
1986-87	All engines AT			70202	70582

Somerset Regal		LR	RR	LF	RF
1985	All engines MT			70597	70598
1985	All engines AT			70202	70582

Terraza		LR	RR	LF	RF
2005-07	All engines FWD			70297	70572
2005-06	All engines AWD	70275	70275		
2005-06	All engines AWD			70297	70272

Cadillac

Allante		LR	RR	LF	RF
1993	All engines			70276	70276
1989-92	All engines			70207	70508
1987-88	All engines			70201	70502

Catera		LR	RR	LF	RF
1997-01	All engines	70105	70105		

Continued on next page

Cadillac cont.

Cimarron		LR	RR	LF	RF
1987-88	All engines AT			70202	70582
1987-88	All engines MT; "w/o intermediate shaft (Right Side 36 1/2"")"			70123	70202
1987-88	All engines MT; "w/ intermediate shaft (Right Side 20 3/4"")"			70123	70102
1982-86	All engines MT			70597	70598
1982-86	All engines AT			70202	70582

CTS		LR	RR	LF	RF
2008-12	All engines			70274	70104
2003-07	All Engines	70095	70097		

Deville		LR	RR	LF	RF
2000-05	All engines; HD Suspension			70286	70286
2000-05	All engines; except HD suspension			70285	70285
1996-99	All engines; except HD suspension			70276	70276
1994-95	V8-4.9L			70291	70572
1994-95	V8-4.6L; Concours			70276	70276
1992-93	V8-4.9L FWD; " w/1.075"" OBJ Thread End a a & w/J41; GM Brake Code"			70291	70572
1992-93	V8-4.9L FWD; w/33 Spline OBJ (30mm Axle Nut)			70207	70508
1991	All engines; 33 outboard spline			70207	70508
1991	All engines; 27 outboard spline			70201	70504
1989-90	All engines; 27 outboard spline			70201	70504
1985-88	All engines			70201	70502

DTS		LR	RR	LF	RF
2006-11	All engines; HD Suspension			70286	70286
2006-11	All engines; except HD suspension			70285	70285

Eldorado		LR	RR	LF	RF
1994-02	V8-4.6L			70276	70276
1993	V8-4.9L			70291	70572
1993	V8-4.6L			70276	70276
1992	V8-4.9L			70291	70572
1991	All engines			70207	70603
1989-90	All engines			70207	70508
1986-88	All engines			70201	70502
1979-85	All engines			70971	70972
1967-78	All engines			70976	70976

Escalade		LR	RR	LF	RF
2007-12	All engines			70886	70886
2002-06	All engines			70985	70985
1999-00	All engines			70985	70985

Fleetwood		LR	RR	LF	RF
1996	All			70276	70276
1994-95	All			70291	70572

Seville		LR	RR	LF	RF
1998-04	All engines			70285	70285
1994-97	V8-4.6L			70276	70276
1992-93	V8-4.9L			70291	70572
1992	All engines			70291	70572
1991	All engines			70207	70603
1989-90	All engines			70207	70508
1986-88	All engines			70201	70502
1979-85	All engines			70971	70972
1976-78	All			70976	70976

SRX		LR	RR	LF	RF
2008-09	All engines AWD			70274	70104
2007	All engines RWD; w/o Painted Prop Shaft		70285		
2004-07	All engines All			70274	70104

STS		LR	RR	LF	RF
2005-11	All engines ALL			70274	70104

XTS		LR	RR	LF	RF
2013-14	All			70314	

Chevrolet

"Beretta, Corsica"		LR	RR	LF	RF
1995-96	L4-2.2L MT			70513	70672
1994-96	V6-3.1L MT			70211	70512
1994-96	V6-3.1L AT			70211	70512
1994-96	L4-2.2L AT			70202	70672
1994	L4-2.2L MT			70513	70672
1992-93	V6-3.1L MT			70513	70514
1992-93	L4-2.2L MT			70513	70672
1992-93	All engines AT			70202	70672
1990-91	V6-3.1L "MT, w/ Intermediate shaft"			70202	70672
1990-91	L4-2.3L "MT, w/Quad 4 2.3L"			70597	70202
1990-91	L4-2.2L MT			70597	70598
1987-91	All engines "AT, w/ (FE7) & w/ (FE3)"			70202	70582
1987-89	V6-2.8L MT; "w/o intermediate shaft (Right Side 36 1/2"")"			70202	70672
1987-89	V6-2.8L MT; "w/ intermediate shaft (Right Side 20 3/4"")"			70202	70598
1987-89	L4-2.0L MT			70597	70598

Aveo		LR	RR	LF	RF
2004-11	All engines MT			70113	70114
2004-11	All engines AT			70111	70112

Aveo 5		LR	RR	LF	RF
2006-11	All engines MT			70113	70114
2006-11	All engines AT			70111	70112

Chevrolet cont.

Cavalier		LR	RR	LF	RF
2000-05	All engines MT			70519	70520
1997-99	L4-2.2L MT			70519	70520
1996	L4-2.4L MT			70217	70520
1996	L4-2.2L MT			70519	70520
1995-05	All engines "AT, 4 Speed"			70205	70205
1995-01	All engines "AT, 3 Speed"			70217	70518
1995	All engines MT			70519	70520
1992-94	All engines AT			70202	70672
1992-94	6 Cyl MT			70513	70202
1992-94	4CYL MT			70513	70514
1985-91	6 Cyl MT			70597	70202
1982-91	All engines AT			70202	70582
1982-91	4 Cyl MT			70597	70598

Celebrity		LR	RR	LF	RF
1984-90	All engines "AT, 4 speed"; HDB 27 Spline OBJ			70283	70584
1984-90	All engines "AT, 3 speed"; HDB 27 Spline OBJ			70281	70502
1984-89	All engines "AT, 4 speed"; LDB 33 Spline OBJ			70289	70590
1984-89	All engines "AT, 3 speed"; LDB 33 Spline OBJ			70202	70588
1984-89	All engines MT; HDB 27 Spline OBJ			70677	70678
1984-89	All engines MT; LDB 33 Spline OBJ			70597	70674
1983	All engines "AT, 3 speed"; HDB 27 Spline OBJ			70281	70588
1983	All engines "AT, 3 speed"; LDB 33 Spline OBJ			70202	70502
1982	All engines "AT, 3 speed"; LDB 33 Spline OBJ			70202	70588

Citation		LR	RR	LF	RF
1980-83	All engines MT			70597	70674
1980-83	All engines AT			70202	70588

Citation II		LR	RR	LF	RF
1984-85	All engines MT			70597	70674
1984-85	All engines AT			70202	70588

Classic		LR	RR	LF	RF
2004-05	All			70375	70375
2004-05	All			70375	70375

Cobalt		LR	RR	LF	RF
2009-10	L4-2.2L MT			70671	70673
2009-10	L4-2.2L AT			70295	70295
2005-08	L4-2.2L AT			70295	70295
2005-08	All engines MT (Opt M86)			70671	70673

Cobalt cont.		LR	RR	LF	RF
2005-08	MT w/ MU3 Trans. Opt.			70501	70295

Cobalt SS		LR	RR	LF	RF
2005-07	L4-2.0L MT w/ MU3 Trans. Opt.			70501	70295

Corvette		LR	RR	LF	RF
1997-04	All engines	70675	70675		

Cruze		LR	RR	LF	RF
2011-14	AT			70137	
2011-12	AT			70137	70135

Epica		LR	RR	LF	RF
2004-06	All engines			70119	70120

HHR		LR	RR	LF	RF
2008-11	"L4-2.2L, L4-2.4L" AT			70295	70295
2008-10	L4-2.0L AT			70131	70131
2006-11	"L4-2.2L, L4-2.4L" MT			70758	70025
2006-07	All engines AT			70295	70295

Impala		LR	RR	LF	RF
2014	V6-3.6L				70312
2014	L4-2.5L			70314	70312
2010-11	All engines			70271	70572
2006-09	V8-5.3L			70203	72354
2006-09	V6-3.5L &V6- 3.9L			70271	70572
2004-05	All engines; except SS			70271	70572
2004-05	All engines; SS			70271	70592
2000-03	All engines			70271	70572

Lumina		LR	RR	LF	RF
2000-01	All engines			70213	70510
1998-99	V6-3.8L			70213	70510
1998-99	V6-3.1L			70209	70510
1997	V6-3.4L			70213	70510
1997	V6-3.1L			70209	70510
1994-96	All engines			70209	70510
1993	All engines MT			70209	70510
1993	All engines "AT, 4 speed"			70209	70510
1993	All engines "AT, 3 speed"			70213	70503
1992	V6-3.1L MT			70209	70510
1992	L4-2.5L MT			70209	70510
1992	L4-2.5L "AT, 3 speed"			70213	70503
1992	All engines w/Electronic Trans			70209	70503
1992	All engines "AT, 3 speed"			70213	70503
1992	All engines "AT, 4 speed (Except 2.5L)"			70209	70511
1991-92	V6-3.4L MT			70209	70510
1990-91	V6-3.1L "AT, 4 speed"			70209	70511
1990-91	V6-3.1L "AT, 3 speed"			70213	70503
1990-91	L4-2.5L AT			70213	70503

Continued on next page

Chevrolet cont.

Lumina APV		LR	RR	LF	RF
1996	All engines			70279	70580
1992-95	All engines "AT, 4 speed"			70279	70580
1992-95	All engines "AT, 3 speed"			70277	70578
1990-91	All engines			70281	70502

Malibu		LR	RR	LF	RF
2013-14	All			70314	70312
2008-12	L4 2.4L AT 6 speed			72099	72097
2008-10	L4 2.4L AT 4 spd			70296	70296
2008-09	V6-3.6L 6 spd AT			70080	70128
2006-08	L4-2.2L			70296	70296
2006-07	V6-3.9L AT 4T-45E Transmission			72339	72341
2005	L4-2.2L; New Body Style			70375	70375
2004-10	V6-3.5L			70296	70296
2004-05	L4-2.2L			70296	70296
1997-03	All engines			70375	70375

Metro		LR	RR	LF	RF
1998-01	L4-1.3L MT			73503	73204
1998-01	L4-1.3L AT			73501	73502
1998-00	L3-1.0L MT			73507	73508

Monte Carlo		LR	RR	LF	RF
2007	V6-3.5L			70271	70572
2006-07	V8-5.3L			70203	72354
2006	"V6-3.5L, V6-3.9L"			70271	70572
2004-05	V6-3.8L W/Supercharger			70271	70592
2004-05	V6-3.8L Naturally Aspirated			70271	70572
2004-05	V6-3.4L			70271	70572
2000-03	All engines			70271	70572
1997-99	V6-3.1L			70209	70510
1997-99	"V6-3.4L, V6-3.8L"			70213	70510
1995-96	V6-3.4L			70213	70510
1995-96	V6-3.1L			70209	70510

Nova		LR	RR	LF	RF
1985-88	All engines			90571	90572

Optra		LR	RR	LF	RF
2004-07	All engines "MT, W/ABS"			97103	97104
2004-07	All engines "AT, W/ABS"			97101	97102

Prizm		LR	RR	LF	RF
1998-02	All engines			90501	90502

Spectrum		LR	RR	LF	RF
1987-88	All engines MT; except turbo			96573	96574
1987-88	All engines AT; except turbo			96571	96572
1985-86	All AT			96571	96572
1985-86	All MT			96573	96574

Sprint		LR	RR	LF	RF
1985-88	All engines MT			70679	70680

Chevrolet Trucks

"S Series, Blazer, Pick-Up"		LR	RR	LF	RF
1997-05	All engines			70681	70282
1997-04	All engines ZR2 Option			70683	70288
1983-96	All engines			70885	70885

Astro Van		LR	RR	LF	RF
2003-05	All engines			70376	70376
1997-02	All engines			70385	70385
1990-96	All engines			70875	70875

Avalanche		LR	RR	LF	RF
2007-12	All engines			70886	70886

Avalanche 1500		LR	RR	LF	RF
2002-06	All engines			70985	70985

Avalanche 2500		LR	RR	LF	RF
2002-06	All engines			70975	70975

Blazer		LR	RR	LF	RF
1992-94	All engines			70905	70905

Colorado		LR	RR	LF	RF
2004-12	All engines ALL			70116	70116

Equinox		LR	RR	LF	RF
2010-14	All			70401	70399
2009	V6-3.4L ALL			70691	70692
2008-09	V6-3.6L "AWD, FWD"			70069	70067
2007-08	V6-3.4L AWD			70691	70692
2007	V6-3.4L "LS, LT, LTZ, AWD"				70692
2005-06	All engines AWD	70225	70227		
2005-06	All engines			70571	10522

Express 1500		LR	RR	LF	RF
2003-13	All AWD			70171	70171

Express 2500		LR	RR	LF	RF
2003	All AWD			70171	70171

K1500		LR	RR	LF	RF
1998-99	All engines			70985	70985
1988-97	All engines			70905	70905

K1500 Suburban		LR	RR	LF	RF
1995-99	w/ Turbo Diesel			70805	70805
1992-99	w/o Turbo Diesel			70905	70905

K2500		LR	RR	LF	RF
1988-00	All engines; "7200 Lb. GVW, w/ 6 bolt wheels"			70985	70985
1988-00	All engines; "8600 Lb. GVW, w/ 8 bolt wheels"			70805	70805

K2500 Suburban		LR	RR	LF	RF
1992-99	All Engines			70805	70805

K3500		LR	RR	LF	RF
1988-00	All engines			70805	70805

Continued on next page

Chevrolet Trucks cont.

Silverado 1500		LR	RR	LF	RF
2007-12	All engines; New Body Style			70886	70886
2004-10	All engines; w/6 Stud Wheels			70985	70985
2004-10	All engines; w/8 Stud Wheels			70975	70975
1999-03	All engines; w/o Crew Cab			70985	70985

Silverado 1500 HD		LR	RR	LF	RF
2007	All engines			70975	70975
2001-03	All engines; Crew Cab			70975	70975

Silverado 2500		LR	RR	LF	RF
2004	All engines			70975	70975
1999-03	All engines			70975	70975

Silverado 2500 HD		LR	RR	LF	RF
2011-14	4WD; 8 Bolt Flange			70416	70416
2006-10	All engines			70975	70975
2004-05	All engines			70975	70975
2001-03	All engines			70975	70975

Silverado 3500		LR	RR	LF	RF
2004-07	All engines			70975	70975
2001-03	All engines			70975	70975

Silverado 3500 HD		LR	RR	LF	RF
2011-14	4WD; 8 Bolt Flange			70416	70416
2007-10	All engines			70975	70975

Suburban 1500		LR	RR	LF	RF
2007-12	All engines 4WD			70886	70886
2000-06	All engines 4WD			70985	70985

Suburban 2500		LR	RR	LF	RF
2000-10	All engines 4WD			70975	70975

Tahoe		LR	RR	LF	RF
2007-11	All engines			70886	70886
2000-06	All engines			70985	70985
1997-99	8 Cyl (Except 4 Door Diesel)			70985	70985
1995-99	8 Cyl (4 Door Diesel)			70805	70805
1995-96	8 Cyl (Except 4 Door Diesel)			70885	70885

Tracker		LR	RR	LF	RF
1999-04	All engines			97871	97572
1998	All engines			97873	97574
1989-91	All engines			97873	97573

Trailblazer		LR	RR	LF	RF
2002-09	All engines			70575	70575

Traverse		LR	RR	LF	RF
2009-12	All AWD & FWD; w/o intermediate shaft				70380
2009-11	Complete Axle			72304	72306

Uplander		LR	RR	LF	RF
2007-09	All engines			70297	70572

Uplander cont.		LR	RR	LF	RF
2005-06	All engines AWD			70297	70272
2005-06	All engines FWD			70297	70572
2005-06	All engines	70275	70275		

Venture		LR	RR	LF	RF
2005	All engines FWD			70271	70572
2002-05	All engines	70275	70275		
2002-04	All engines FWD			70271	70572
2002-04	All engines AWD			70271	70278
1999-01	All engines			70271	70572
1997-98	All engines			70273	70572

Chrysler

300		LR	RR	LF	RF
2005-13	All engines AWD			72033	72035
2005-10	V6-3.5L RWD	72280	72282		
2005-10	V6-2.7L RWD	72280	72282		
2006-10	V8-5.7L RWD	72163	72165		

300M		LR	RR	LF	RF
2002-04	All engines; Special			72009	72011
1999-04	All engines; except Special			72201	72202

Aspen		LR	RR	LF	RF
2007-09	All			72275	72275

Cirrus		LR	RR	LF	RF
1998-00	All engines			72501	72502
1995-97	All engines			72503	72504

Concorde		LR	RR	LF	RF
1998-04	All engines			72201	72202
1996-97	All engines			72203	72204
1993-95	All engines			72207	72208

E-Class		LR	RR	LF	RF
1984	L4-2.2L Turbo			72573	72574
1983-84	4 Cyl Non-turbo; Except Turbo			72575	72572

Executive Sedan		LR	RR	LF	RF
1983-84	L4-2.6L			72575	72572

Imperial		LR	RR	LF	RF
1990-93	All engines; "w/o intermediate shaft (Right Side 39 1/2"")"			72507	72508
1990-93	All engines; "w/ intermediate shaft (Right Side 25 1/4"")"			72507	72507

Intrepid		LR	RR	LF	RF
1998-04	All engines			72201	72202
1996-97	All engines; "w/ intermediate shaft (Right Side 25 1/4"")"			72203	72204
1993-95	All engines; "w/o intermediate shaft (Right Side 39 1/2"")"			72207	72208

Continued on next page

Chrysler cont.

Laser		LR	RR	LF	RF
1984-86	L4-2.2L Turbo			72575	72575
1984-86	All engines Non-turbo; Except Turbo			72575	72572

LeBaron		LR	RR	LF	RF
1987-95	All engines; "w/o intermediate shaft (Right Side 39 1/2"")"			72507	72508
1987-95	All engines; "w/ intermediate shaft (Right Side 25 1/4"")"			72507	72507
1984-86	L4-2.2L Turbo			72575	72575
1984-86	All engines Non-turbo; Except Turbo			72575	72572
1982-83	All engines; spring loaded inner joint			72573	72574

LHS		LR	RR	LF	RF
1999-01	All engines			72201	72202
1996-97	All engines			72203	72204
1994-95	All engines			72207	72208

New Yorker		LR	RR	LF	RF
1996	All engines			72203	72204
1994-95	All engines			72207	72208
1987-93	All engines; "w/o intermediate shaft (Right Side 39 1/2"")"			72507	72508
1987-93	All engines; "w/ intermediate shaft (Right Side 25 1/4"")"			72507	72507
1984-86	L4-2.2L Turbo; turbo			72575	72575
1983-86	4 Cyl Non-turbo; except turbo			72575	72572
1982-83	All engines; spring loaded inner joint			72573	
1982-83	All engines; snap ring on inner joint			72571	72574

Pacifica		LR	RR	LF	RF
2007-08	AWD			72235	72240
2007-08	FWD			72240	72235
2007-08	FWD			72233	72360
2004-06	All engines AWD			72577	72578
2004-06	All engines FWD			72577	72580

PT Cruiser		LR	RR	LF	RF
2004-10	Naturally Aspirated			72517	72212
2004-09	All engines MT; w/Disc Rear Brakes			72519	72520
2004-09	All engines AT Turbo			72517	72518
2003	All engines MT Turbo			72101	72102
2003	All engines AT Turbo			72517	72212
2003	All engines MT, w/o Turbo			72517	72518
2001-02	All engines			72517	72518

Sebring		LR	RR	LF	RF
2010	All			72373	
2007-10	V6-3.5L			72300	72377

Sebring cont.

Sebring cont.		LR	RR	LF	RF
2007-10	V6-2.7L			72373	72371
2007-09	L4-2.4L			72373	72374
2001-06	V6-2.7L; "convertible , sedan"			72509	72512
2001-06	L4-2.4L; "convertible , sedan"			72509	72510
2001-05	L4-2.4L; coupe			89511	89512
2001-05	"V6-2.7L, V6-3.0L"; coupe			89509	89208
1998-00	All engines; "convertible , sedan"			72501	72502
1996-97	All engines; convertible			72503	72504
1995-99	L4-2.0L; coupe			72511	72514
1995-00	6 Cyl; coupe			72511	72210
1995	6 Cyl; All			72511	72210
1995	4 Cyl; All			72511	72514

Town & Country Van		LR	RR	LF	RF
2008-10	V6-4.0L FWD			72159	72242
2008-10	V6-3.8L FWD			72159	72161
2008-10	V6-3.3L FWD			72153	72157
2001-04	All engines AWD			72521	72522
2000-07	All engines FWD			72521	72528
1997-00	All engines AWD	72023	72023	72521	72522
1996-99	All engines FWD			72521	72528
1992-95	All engines AWD			72523	72524
1990-95	All engines FWD; w/Unequal Length Shafts			72523	72530
1990-95	All engines FWD; w/Equal Length Shafts			72523	72523

Voyager		LR	RR	LF	RF
2000-03	All engines			72521	72528

Daewoo

Lanos		LR	RR	LF	RF
1999-02	All engines MT				86502
1999-02	All engines AT			86201	86202

Leganza		LR	RR	LF	RF
1999-02	All engines			86503	86504

Nubira		LR	RR	LF	RF
1999-02	All engines AT; w/Daewoo Transmission			86205	86205
1999-02	All engines MT			86507	86508

Daihatsu

Charade		LR	RR	LF	RF
1988-92	All engines MT			72583	72584

Dodge

"Aries, K-car"		LR	RR	LF	RF
1987-89	All engines			72507	72508
1984-86	All engines			72575	72572
1982-83	All engines; w/ spring loaded to 5/83			72573	N/A
1982-83	All engines; w/ snap ring to 5/83			72571	72574

Dodge cont.

"Omni, Charger"		LR	RR	LF	RF
1987-90	All engines MT			72571	72574
1987-90	All engines AT			72587	72588
1984-86	All engines; w/o High Performance Package			72571	72574
1983	L4-1.6L			72571	72574
1981-86	L4-2.2L; plug-in inner joint			72571	72574
400		**LR**	**RR**	**LF**	**RF**
1983	All engines; "w/o intermediate shaft (Right Side 39"")"			72575	72575
1983	All engines; "w/ intermediate shaft (Right Side 25 1/2"")"			72575	72574
1983	All engines; w/Spring Loaded Design Shaft			72573	72572
600		**LR**	**RR**	**LF**	**RF**
1987-88	All engines; "w/o intermediate shaft (Right Side 39 1/2"")"			72507	72508
1987-88	All engines; "w/ intermediate shaft (Right Side 25 1/4"")"			72507	72507
1983-86	All engines; "w/o intermediate shaft (Right Side 39"")"			72575	72575
1983-86	All engines; "w/ intermediate shaft (Right Side 25 1/2"")"			72575	72572
Avenger		**LR**	**RR**	**LF**	**RF**
2011-13	All			72300	72371
2008-10	V6-2.7L			72373	72371
2008-09	V6-3.5L			72300	72377
2008-09	L4-2.4L			72373	72374
2000	V6-2.5L			72511	72210
2000	V6 2.5L			72511	72210
1995-99	V6-2.5L			72511	72210
1995-99	L4-2.0L			72511	72514
Caliber		**LR**	**RR**	**LF**	**RF**
2008-09	L4-2.4L "SRT-4, FWD"			72381	72371
2007-12	FWD			72221	72222
2007-11	L4-2.0L CVT			72221	72224
2007-08	L4-2.4L AWD			72221	72175
Caravan		**LR**	**RR**	**LF**	**RF**
1996-07	All engines FWD			72521	72528
1991-95	All engines FWD; "w/o intermediate shaft (Right Side 41"")"			72523	72530
1991-95	All engines FWD; "w/ intermediate shaft (Right Side 26"")"			72521	72523
1991-93	All engines AWD			72523	72524
1987-90	All engines; w/Unequal Length Shafts			72523	72530

Caravan cont.

		LR	RR	LF	RF
1987-90	All engines; w/Equal Length Shafts			72523	72523
1984-86	All engines			72581	72582
Challenger		**LR**	**RR**	**LF**	**RF**
2009	V6-3.5L RWD	72280	72282		
Charger		**LR**	**RR**	**LF**	**RF**
2007-13	All engines AWD			72033	72035
2006-10	V8-5.7L RWD	72163	72165		
2006-10	V6-3.5L RWD	72280	72282		
2006-10	V6-2.7L RWD	72280	72282		
Colt		**LR**	**RR**	**LF**	**RF**
1993-95	L4-1.5L			89571	89572
1992	L4-1.5L; w/o turbo			89573	89574
1989-91	L4-1.5L; "exc. Vista, Vista wagon"			89573	89574
1989-90	L4-1.6L MT; "exc. Vista, Vista wagon"			NA	89574
1989-90	L4-1.6L AT; "exc. Vista, Vista wagon"			NA	89574
1987-88	L4-1.5L Non-turbo; w/o turbo			89573	89574
1984-91	All engines FWD; Vista			89581	89582
Dakota		**LR**	**RR**	**LF**	**RF**
2009-10	All engines; Except TRX4			72276	72276
2005-09	All engines			72276	72276
2001-04	All engines; From 9/12/00			72285	72285
2000-01	All engines; Before 9/11/00			72105	72105
1997-99	All engines			72875	72875
1991-96	All engines			72805	72805
1987-90	All engines			72876	72876
Daytona		**LR**	**RR**	**LF**	**RF**
1987-93	All engines; w/Unequal Length Shafts			72507	72508
1987-93	All engines; w/Equal Length Shafts			72507	72507
1984-86	L4-2.2L Turbo			72575	72575
1984-86	All engines Non-turbo; Non-Turbo			72575	72572
Durango		**LR**	**RR**	**LF**	**RF**
2004-09	All engines; w/o intermediate shaft (Right Side 39 1/2ö)			72275	72275
2001-03	All engines; From 9/12/00			72285	72285
2000-01	All engines; Before 9/11/00			72105	72105
1998-99	All engines			72875	72875
Dynasty		**LR**	**RR**	**LF**	**RF**
1988-93	All engines; w/Unequal Length Shafts			72507	72508
1988-93	All engines; w/Equal Length Shafts			72507	72507

Dodge cont.

Grand Caravan		LR	RR	LF	RF
2008-10	V6-4.0L FWD			72159	72242
2008-10	V6-3.8L FWD			72159	72161
2008-10	V6-3.3L FWD			72153	72157
2001-04	All engines AWD			72522	72521
1997-00	All engines AWD	72023	72023	72522	72521
1996-07	All engines FWD			72521	72528
1991-95	All engines AWD			72523	72524
1987-95	All engines FWD; w/Unequal Length Shafts			72523	72530
1987-95	All engines FWD; w/Equal Length Shafts			72523	72523

Intrepid		LR	RR	LF	RF
1998-04	All engines			72201	72202
1996-97	All engines; "w/ intermediate shaft (Right Side 25 1/4"")"			72203	72204
1993-95	All engines; "w/o intermediate shaft (Right Side 39 1/2"")"			72207	72208

Journey		LR	RR	LF	RF
2011-13	All				72377
2009-10	All			72373	72374
2009-10	All			72300	72377

Lancer		LR	RR	LF	RF
1987-89	All engines; Turbo w/Equal Length Shafts			72507	
1987-89	Turbo w/Unequal Length Shafts			72507	72508
1987-89	All engines; Non			72507	72507
1985-86	Turbo			72575	72575
1985-86	All engines; Non			72575	72572

Magnum		LR	RR	LF	RF
2005-08	V8-5.7L RWD	72163	72165		
2005-08	V6-3.5L RWD	72280	72282		
2005-08	V6-2.7L RWD	72280	72282		
2005-08	All engines AWD			72033	72035

Monaco		LR	RR	LF	RF
1990-92	All engines			72213	72214

Neon		LR	RR	LF	RF
2003-05	L4-2.4L Turbo; w/Turbo SRT-4			72519	72212
2001-05	All engines AT 4 Spd			72517	72518
2000-05	All engines MT			72517	72520
2000-01	All AT 3SPD			72517	72532
1998-99	All engines MT			72533	72529
1998-99	All engines AT			72533	72534
1995-97	All engines MT			72537	72540
1995-97	All engines AT			72537	72538

Nitro		LR	RR	LF	RF
2007-11	All engines			72481	72479

Raider		LR	RR	LF	RF
1987-89	All			89101	89102

Ram 1500		LR	RR	LF	RF
2006-10	All			72370	72370
2002-05	All engines			72286	72286

Ram 50		LR	RR	LF	RF
1983-93	All engines			89101	89102

Rampage		LR	RR	LF	RF
1982-84	All engines			72571	72574

Shadow		LR	RR	LF	RF
1987-94	All engines; w/ Equal Length Shafts			72507	72508
1987-94	All engines; w/ Unequal Length Shafts			72507	72507

Spirit		LR	RR	LF	RF
1992-95	All engines; w/ Unequal Length Shafts			72507	72508
1989-91	All engines; w/ Equal Length Shafts			72507	72507

Stealth		LR	RR	LF	RF
1993-96	All engines "MT, FWD"				89584
1993-96	All engines "AT, FWD"; SOHC			89203	89584
1993-96	All engines "AT, FWD"; DOHC			89203	89204
1993-96	All engines AWD			89201	89504
1991-92	All engines "MT, FWD"			89203	89510
1991-92	All engines "AT, FWD"			89203	89508
1991-92	All engines AWD			89201	89504

Stratus		LR	RR	LF	RF
2001-06	L6-2.7L Sedan			72509	72502
2001-06	L4-2.4L Sedan			72509	72502
2001-05	L4-2.4L Coupe			89511	89512
2001-05	"L6-2.7L, L6-3.0L" Coupe			89509	89208
1998-00	All engines			72501	72502
1995-97	All engines			72503	72504

Eagle

Premier		LR	RR	LF	RF
1990-92	All engines			72213	72214
1988-89	V6-3.0L			72213	72214

Summit		LR	RR	LF	RF
1993-96	L4-1.8L FWD			89501	89502
1993-96	L4-1.5L			89571	89572
1992	L4-1.5L			89573	89574
1991	All engines			89573	89574
1989-90	L4-1.6L MT				88572
1989-90	L4-1.6L AT				89574
1989-90	L4-1.5L			89573	89574

Continued on next page

Eagle cont.

Talon		LR	RR	LF	RF
1995-98	All engines "MT, AWD"			89207	89518
1995-98	All engines "AT, AWD"			89207	89514
1995-98	All engines "MT, FWD"; Turbo			89521	89522
1995-98	All engines "AT, FWD"; Turbo			89519	89520
1995-98	All engines FWD; Non-Turbo			72511	72514
1990-94	All engines AWD			89207	89582
1990-94	All engines FWD			89581	89582

Vision		LR	RR	LF	RF
1996-97	All engines			72203	72204
1993-95	All engines			72207	72208

Fiat

500		LR	RR	LF	RF
2012-13	AT			85103	85105

Ford

Aerostar		LR	RR	LF	RF
1992-97	All engines; w/Disk Style IBJ			71975	71975
1990-91	All engines; w/U-Joint IBJ			71005	71005

Aspire		LR	RR	LF	RF
1994-97	All engines MT; U-joint style Inboard			71503	71504
1994-97	All engines AT			71501	71502

Contour		LR	RR	LF	RF
1995-00	All engines MT; Window Style ABS Ring			71513	71212
1995-00	All engines MT; Tooth Style ABS Ring			71509	71208
1995-00	All engines AT; Window Style ABS Ring			71511	71212
1995-00	All engines AT; Tooth Style ABS Ring			71507	71208

Edge		LR	RR	LF	RF
2011-14	All engines AWD			71248	71252
2007-14	All engines FWD			71248	71250
2007-10	All engines AWD	71492	71494	71248	71252

Escape		LR	RR	LF	RF
2009-12	All engines AT			71246	71204
2007-08	All engines "MT, 4WD"			11933	71232
2007-08	All engines "MT, 2WD"			11932	71232
2007-08	All engines AT			71529	71204
2005-12	All engines CVT; Hybrid			71217	71204
2005-06	V6-3.0L AT			71529	71204
2005-06	L4-2.3L "MT, 4WD"; except Hybrid			11933	71232
2005-06	L4-2.3L "MT, 2WD"			11932	71232
2005-06	L4-2.3L AT			71529	71204
2001-04	V6-3.0L			71529	71204
2001-04	L4-2.0L MT			70531	71232

Escape cont.		LR	RR	LF	RF
2001-04	L4-2.0L AT			71529	71204
2001-04	All engines	71533	71534		

Escort		LR	RR	LF	RF
1998-03	All engines MT; ZX2			71521	71222
1998-03	All engines AT; ZX2			71517	71518
1997-03	All engines AT			71517	71518
1997-02	All engines MT			71519	71520
1991-96	L4-1.9L			71517	71518
1991-96	L4-1.8L MT; GT			71519	71202
1991-96	L4-1.8L AT; Except GT			71517	71518
1984-90	All engines MT			71573	71572
1984-90	All engines AT			71571	71572
1983	All engines MT; From 4/83			71573	71572

Expedition		LR	RR	LF	RF
2011-13	All engines	71189			
2007-13	All engines			71174	71170
2003-06	All engines 4WD; w/ 9.75" Ring Gear	71545	71543	71805	71805
1997-02	All engines 4WD			71875	71875

Explorer		LR	RR	LF	RF
2011-13	All engines 4WD	71388	71191		
2006-10	All engines 4WD	71264	71058	71371	71372
2002-05	All engines 4WD	71062	71060	71593	71274
1995-01	All engines 4WD			71597	71276

Explorer Sport Trac		LR	RR	LF	RF
2007-10	All engines 4WD	71264	71058	71371	71372
2003-05	All engines			71599	71278
2001-02	All engines			71597	71276

F150		LR	RR	LF	RF
2009-13	All engines			71174	71170
2004-08	All engines			71805	71805
1997-03	All engines			71875	71875

F250		LR	RR	LF	RF
1997-98	All engines; Under 8500 # GVW			71875	71875

F-250 Super Duty		LR	RR	LF	RF
1999-03	All Engines; Under 8500 # GVW			71875	71875

Festiva		LR	RR	LF	RF
1988-93	All engines AT			71577	98571
1988-93	All engines MT			71579	71580

Five Hundred		LR	RR	LF	RF
2005-07	All engines AWD			70687	70774
2005-07	All engines FWD AT			70771	70772
2005-07	All engines "FWD AT, CVT"			70687	70688

Flex		LR	RR	LF	RF
2009-11	All Engines AWD			71370	71285
2009-11	FWD			71370	71569

Ford cont.

Focus		LR	RR	LF	RF
2006-11	All engines MT			71581	71578
2005-11	All engines AT			71581	71582
2002-04	All engines MT; 1B5 Trans			71583	71584
2002-04	All engines MT; MTX75 Trans			71581	71582
2002-04	All engines AT			71581	71582
2000-01	All engines MT; 1B5 Trans			71583	71584
2000-01	All engines MT; MTX75 Trans			71581	71582
2000-01	All engines AT			71581	71582

Focus SVT		LR	RR	LF	RF
2002-04	All engines "MT, 6 speed"			71523	71224

Freestar		LR	RR	LF	RF
2004-07	All engines			71271	72064

Freestyle		LR	RR	LF	RF
2005-07	All engines AWD			70687	70774
2005-07	All engines FWD			70687	70688

Fusion		LR	RR	LF	RF
2010-12	V6-3.5L			71172	71613
2010-12	V6-3.0L, L4-2.5L" AT			71176	71178
2006-09	V6-3.0L "AT, 6 speed"			98501	72062
2006-09	L4-2.3L "AT, 5 speed, FWD"			98573	98274
2006-09	L4-2.3L MT			98117	98274
2006-09	All engines "AT, 5 speed"			98573	98274

Probe		LR	RR	LF	RF
1994-97	V6-2.5L			98507	98204
1994-97	L4-2.0L MT			98507	98204
1994-97	L4-2.0L AT			98503	98204
1993	All engines			98507	98204
1990-92	6 Cyl			98511	98202
1989-92	L4-2.2L Turbo			98511	98202
1989-92	4 Cyl; Non-Turbo			98509	98208

Ranger		LR	RR	LF	RF
2003-11	All engines			71599	71278
2000-02	All engines; From 10/28/99			71597	71276
1998-00	All engines; Before 10/27/99			98577	98278

Taurus		LR	RR	LF	RF
2008-12	All engines FWD			71370	71569
2008	All engines AWD			71370	71001
2004-07	All engines; from 10/28/99			71203	71508
2000-03	All engines AX4S trans.; before 10/27/99			71203	71510
2000	All engines AX4N trans.			71203	71508
1996-99	V8-3.4L			71203	71508
1996-99	V6-3.0L exc. AX4N trans.			71203	71510

Taurus cont.

		LR	RR	LF	RF
1996-00	V6-3.0L AX4N trans.			71203	71508
1994-95	V6-3.2L AT; SHO			71203	71510
1994-95	V6-3.0L MT			71527	71228
1994-95	"V6-3.0L, V6-3.8L" AX4N trans.			71203	71508
1994-95	"V6-3.0L, V6-3.8L" exc. AX4N trans.			71203	71510
1993	V6-3.2L AT; SHO			71203	71510
1989-92	V6-3.0L MT; SHO			71527	71228
1986-93	"V6-3.0L, V6-3.8L"			71203	71510

Taurus X		LR	RR	LF	RF
2008-09	All FWD			71370	71569
2008	All engines AWD			71370	71001

Tempo		LR	RR	LF	RF
1992-94	All engines MT			71589	71588
1992-94	All engines AT			71587	71588
1991	All engines MT			71589	71588
1991	All engines AT			71587	71588
1986-90	All engines MT			71573	71572
1986-90	All engines AT			71571	71572
1984-85	All engines "MT, 5 speed"			71573	71572
1984-85	All engines "MT, 4 speed"			71573	71572
1984-85	All engines AT			71571	71572

Thunderbird		LR	RR	LF	RF
2002-05	All RWD	71240	71242		
1987-97	6 Cyl; "w/7.5"" Ring Gear"	71575	71575		
1987	8 Cyl; "w/8.8"" Ring Gear"	71576	71576		

Transit Connect		LR	RR	LF	RF
2010-13	All			71461	71555

Windstar		LR	RR	LF	RF
2001-03	All engines			71201	71512
1999-00	All engines; 23 spline inner joint			71201	71514
1995-98	All engines; 25 spline inner joint			71538	71210

Geo

Metro		LR	RR	LF	RF
1995-97	L4-1.3L MT			73503	73204
1995-97	L4-1.3L AT			73501	73502
1995-97	L3-1.0L MT			73507	73508
1989-94	All engines MT			73573	73574
1989-94	All engines AT			73571	73572

Prizm		LR	RR	LF	RF
1993-97	All engines			90501	90502
1989-92	All engines			90571	90572

Continued on next page

GEO cont.

Spectrum		LR	RR	LF	RF
1989	All engines MT; except turbo			96573	96574
1989	All engines AT; except turbo			96571	96572

Storm		LR	RR	LF	RF
1992-93	L4-1.8L MT; DOHC			96501	96502
1992-93	L4-1.8L AT; DOHC			96501	96502
1990-93	L4-1.6L MT; SOHC			73579	96580
1990-93	L4-1.6L AT; SOHC			73577	73578

Tracker		LR	RR	LF	RF
1996-97	All engines			97873	97574
1989-95	All engines			97873	97573

GMC Trucks

"Yukon XL 1500, Yukon XL 2500"		LR	RR	LF	RF
2007-12	All engines 2500			70975	70975
2007-12	All engines 1500			70886	70886
2000-06	All engines 2500			70975	70975
2000-06	All engines 1500			70985	70985

"Yukon, Yukon Denali"		LR	RR	LF	RF
2007-11	All engines			70886	70886
2000-06	All engines			70985	70985
1995-99	V8-5.7L (Except 4 Door Diesel)			70985	70985
1995-97	All engines (4 Door Diesel)			70805	70805
1992-94	All engines			70905	70905

Acadia		LR	RR	LF	RF
2007-12	All AWD & FWD; w/o intermediate shaft				70380
2007-09	All engines; Complete Axle			72304	72306

Canyon		LR	RR	LF	RF
2004-12	All engines			70116	70116

Envoy		LR	RR	LF	RF
2002-09	All engines			70575	70575

Jimmy, S15		LR	RR	LF	RF
1997-05	All engines; ZR2 option			70683	70288
1997-05	All engines; except ZR2 option			70681	70282
1994-96	All engines; ZR2 option			70876	70876
1983-96	All engines; except ZR2 option			70885	70885

K1500		LR	RR	LF	RF
1998-99	All engines			70985	70985
1988-97	All engines			70905	70905

K1500 Suburban		LR	RR	LF	RF
1995-99	w/ Turbo Diesel			70805	70805
1992-99	All w/o Turbo Diesel			70905	70905

K2500		LR	RR	LF	RF
1988-00	All engines; "7200 Lb. GVW, w/ 6 bolt wheels"			70985	70985
1988-00	All engines; "8600 Lb. GVW, w/ 8 bolt wheels"			70805	70805

K2500 Suburban		LR	RR	LF	RF
1992-99	All engines			70805	70805

K3500		LR	RR	LF	RF
1988-00	All engines			70805	70805

Safari Van		LR	RR	LF	RF
2003-05	All engines			70376	70376
1997-02	All engines			70385	70385
1990-96	All engines			70875	70875

Savana 1500		LR	RR	LF	RF
2003-13	All AWD			70171	70171

Savana 2500		LR	RR	LF	RF
2003	All AWD			70171	70171

Sierra 1500		LR	RR	LF	RF
2007-12	All engines; New Body Style			70886	70886
1999-06	All engines; w/o Crew Cab			70985	70985

Sierra 1500 HD		LR	RR	LF	RF
2005-07	All engines; w/8 Stud Wheels			70975	70975
2001-03	All engines			70975	70975

Sierra 2500 / 2500HD		LR	RR	LF	RF
2011-14	4WD; 8 Bolt Flange			70416	70416
1999-10	All engines			70975	70975

Sierra 3500 / 3500HD		LR	RR	LF	RF
2011-14	4WD; 8 Bolt Flange			70416	70416
2001-10	All engines			70975	70975

Sonoma		LR	RR	LF	RF
1997-04	All engines; except ZR2 option			70681	70282
1994-95	All engines; ZR2 option			70876	70876
1991-96	All engines; except ZR2 option			70885	70885

Terrain		LR	RR	LF	RF
2010-14	All			70401	70399

Honda

Accord		LR	RR	LF	RF
2008-12	V6-3.5L MT			91696	91339
2008-12	V6-3.5L AT			91373	91175
2008-12	L4-2.4L MT			91008	91370
2008-12	L4-2.4L AT			91008	91370
2005-07	V6-3.0L			91571	91472
2005-07	V6 3.0L Hybrid			91343	91341
2005-07	L4-2.4L MT			91577	91278
2005-07	L4-2.4L AT			91573	91574
2003-04	V6-3.0L			91571	91472
2003-04	L4-2.4L MT			91577	91278
2003-04	L4-2.4L AT			91573	91574
1998-02	V6-3.0L			91501	91502
1998-02	L4-2.3L MT			91519	91518
1998-02	L4-2.3L AT			91517	91518
1995-97	L6-2.7L			91509	91510
1994-97	L4-2.2L MT			91507	91504
1994-97	L4-2.2L AT			91503	91504
1990-93	All engines MT			91513	91524
1990-93	All engines AT			91523	91524
1986-89	All engines MT			91581	91580
1986-89	All engines AT			91579	91580
1985	All engines MT; SE-i			91587	91584
1985	All engines AT; SE-i			91583	91584
1984-85	All engines MT; Except SE-i			91591	91590
1984-85	All engines AT; Except SE-i			91589	91590
1982-83	All engines; 47mm Seal Diameter			91593	91590
1976-79	All engines			91597	91598

Civic		LR	RR	LF	RF
2006-13	L4-1.8L AT			91227	91229
2006-11	L4-2.0L "MT, 6 Spd"			91152	91237
2006-11	L4-1.8L MT 5 speed			91392	91371
2006-11	L4-1.3L Hybrid			91694	91252
2003-05	L4-2.0L MT; "Si, V-TEC"			94513	94414
2003-05	L4-1.7L MT; V-TEC			91521	91522
2003-05	L4-1.7L AT; Except Hybrid			91527	91528
2003-05	L4-1.3L MT; Hybrid			91143	91145
2002	L4-2.0L MT; "Si, V-TEC"			94513	94414
2002	L4-1.7L MT			91521	91522
2002	L4-1.7L AT			91527	91528
2001	All engines MT			91521	91522
2001	All engines AT			91527	91528
1999-00	All engines; Except Si Coupe			91529	91530
1999-00	All engines; Si Coupe			94501	94502
1992-98	All engines			91529	91530
1988-91	All engines; "DX,LX,SI & 4 Dr. (26 Spline OBJ)"			91671	91672
1988-91	All engines 4WD			91771	91772

Civic cont.		LR	RR	LF	RF
1988-91	All engines MT; Std. HB w/4 Spd MT (23 Spline OBJ) Yellow Stripe			91673	91674
1985-87	All engines Wagon; AWD			91681	91682
1985-87	All engines; FWD & Wagon			91677	91678
1984	All engines; Except CR-X			91677	91678
1980-83	"L4-1.3L, L4-1.5L"; except HF			91679	91680

Civic Del Sol		LR	RR	LF	RF
1993-97	L4-1.6L VTEC			94501	94502
1993-97	S, Si; Except VTEC			91529	91530

CR-V		LR	RR	LF	RF
2007-11	All engines			91601	91602
2002-06	All engines	91468	91466	91577	91272
1998-01	All engines MT			91207	91540
1997-01	All engines; w/ABS	91411	91413		
1997-01	All engines AT			91203	91520

CRX		LR	RR	LF	RF
1988-91	All engines; HF (23 Spline OBJ) Yellow Stripe			91673	91674
1988-91	All engines; (Except HF) (26 Spline OBJ)			91671	91672

Element		LR	RR	LF	RF
2003-11	All engines			91697	91274

Fit		LR	RR	LF	RF
2009-11	All AT			91462	91149
2009-11	All MT			91462	91464
2007-08	All engines MT			91349	91351
2007-08	All engines AT			91349	91149

Insight		LR	RR	LF	RF
2000-14	All engines			91353	91355

Odyssey		LR	RR	LF	RF
2007-10	All engines			91214	36264
2005-06	All engines			36263	36264
1999-04	All engines			91537	94428
1995-98	All engines			91209	91538

Passport		LR	RR	LF	RF
2002	All engines; Complete Axle			40227	40227
1998-01	All engines 4WD; Complete Axle			96576	96576
1998-01	All engines 4WD; w/o Inboard joint			40617	40617
1996-97	All engines 4WD; "Complete Axle, From 12/95"			96585	96585
1996-97	All engines 4WD; w/o Inboard joint			40618	40618
1994-95	All engines 4WD; Axle w/o I.B. Joint(NTN);From 6/95; To 11/95			91298	91298
1994-95	All engines 4WD; w/o Inboard joint			40211	40211

Honda cont.

Pilot		LR	RR	LF	RF
2009-11	All engines			91110	91112
2006-08	All engines; Complete Axle			36249	94424
2005	All engines; Complete Axle			36249	91551
2003-04	All engines			91539	91212

Prelude		LR	RR	LF	RF
1997-01	All engines			91231	91532
1992-96	All engines MT			91201	91534
1992-96	All engines AT			91533	91534
1990-91	All engines			91507	91504
1988-89	All engines			91683	91684
1985-87	All engines MT; Si			91689	91688
1985-87	All engines AT; Si			91687	91688
1984-87	All engines MT; Except Si			91693	91692
1984-87	All engines AT; Except Si			91691	91692

Ridgeline		LR	RR	LF	RF
2006-11	All engines			40251	40252

S2000 (HP Axles)		LR	RR	LF	RF
2000-09	All engines	22565	22566		

Hummer (before 2003 see AM General)

H2		LR	RR	LF	RF
2003-09	All engines			70975	70975

H3		LR	RR	LF	RF
2006-10	All engines			70082	70082

H3T		LR	RR	LF	RF
2009	All engines			70082	70082

Hyundai

Accent		LR	RR	LF	RF
2006-11	All engines AT			88348	88438
2006-11	MT			88432	88434
2000-05	All engines MT			88503	88104
2000-05	All engines AT			88501	88502
1995-99	All engines			88507	88504

Azera		LR	RR	LF	RF
2006-11	All Engines			37324	37325

Elantra		LR	RR	LF	RF
2009-12	L4 2.0L Touring			88415	88427
2007-10	All engines; except Touring package			88415	88417
2001-06	All engines MT			88509	88510
2001-06	All engines AT			88511	88512
1999-00	All engines			89527	89528
1996-98	All engines			88533	88534
1993-95	L4-1.8L			88571	88574
1993-95	L4-1.6L MT			89579	89580
1993-95	L4-1.6L AT			89573	89574
1992	All engines MT			88571	88574
1992	All engines AT			89573	89574

Entourage		LR	RR	LF	RF
2007-09	All engines			87101	87102

Excel		LR	RR	LF	RF
1990-94	All engines			89583	89574
1986-89	All engines			89583	89578

Santa Fe		LR	RR	LF	RF
2010-12	All engines MT				88422
2010-12	All engines AT			88420	88422
2007-09	V6-3.3L AT			88295	88012
2007-09	V6-2.7L MT			88117	88118
2007-09	V6-2.7L AT FWD 4 speed			88561	88012
2005-06	V6-3.5L 4WD			88527	88528
2005-06	V6-3.5L FWD			88527	88208
2005-06	V6-2.7L "4WD, 4 speed"			88107	88108
2005-06	V6-2.7L FWD			88109	88108
2003-04	V6-3.5L AT 4WD			88527	88528
2003-04	V6-3.5L AT FWD			88527	88208
2003-04	V6-2.7L "AT 4WD, 4 speed"			88107	88108
2003-04	L4-2.4L MT			88117	88118
2003-04	L4-2.4L AT			88107	88114
2001-06	V6-2.7L "AT, 4WD"			88107	88322
2001-06	V6-2.7L AT FWD			88109	88108
2001-02	V6-2.7L 4WD			88107	88108
2001-02	L4-2.4L MT			88117	88118
2001-02	L4-2.4L AT			88107	88114

Scoupe		LR	RR	LF	RF
1993-95	All Turbo			88572	
1993-95	Non-turbo			88572	88578
1991-92	All engines			89583	89574

Sonata		LR	RR	LF	RF
2011-13	FWD AT			88637	88635
2011-13	FWD AT			88633	88631
2006-10	V6-3.3L			37324	37325
2006-08	L4-2.4L MT			37322	88259
2006-08	L4-2.4L AT			37320	37321
2002-05	V6-2.7L			87501	87202
2002-05	L4-2.4L			88513	88514
1999-01	V6-2.5L AT			87501	87202
1999-01	V6-2.5L MT			88513	87202
1999-01	L4-2.4L AT			88513	88514
1994-98	V6-3.0L			88219	88520
1994-98	L4-2.0L MT			88519	88518
1994-98	L4-2.0L AT			88517	88518
1992-93	V6-3.0L			88201	88522
1992-93	L4-2.0L			88581	
1990-91	V6-3.0L			88271	
1990-91	L4-2.4L			88571	88574
1989	All engines			88571	88574

Continued on next page

Hyundai cont.

Tiburon		LR	RR	LF	RF
2003-08	V6-2.7L MT 6 Spd			88261	88257
2003-08	V6-2.7L AT			88536	88257
2003-08	V6-2.7L MT 5 speed			88536	88257
2003-08	L4-2.0L MT			88509	88510
2003-08	L4-2.0L AT			88511	88512
2000-01	All			89527	89528
1997-99	All engines			88533	88534

Tucson		LR	RR	LF	RF
2008-09	V6-2.7L			89111	89112
2008-09	L4-2.0L			89103	89110
2005-09	L4-2.0L "MT, FWD"			89103	89104
2005-09	L4-2.0L AT			89103	89110
2005-09	4WD	88098	88098		
2005-07	V6-2.7L w/ Traction Control			89111	89112
2005-07	L4-2.0L "MT , 4WD"			89103	89108

Veracruz		LR	RR	LF	RF
2007-12	All engines			88456	88012

XG300		LR	RR	LF	RF
2001	All engines			88523	88204

XG350		LR	RR	LF	RF
2002-05	All engines			88523	88204

Infiniti

FX35		LR	RR	LF	RF
2003-08	All engines AWD			93112	93111

FX45		LR	RR	LF	RF
2003-08	All engines AWD			93113	93111

G20		LR	RR	LF	RF
1999-02	All engines MT; Touring package			95103	95104
1999-02	All engines AT; Touring package			95101	95102
1999-02	All engines; except Touring package			95501	95502
1994-96	All engines AT; locking differential (Left Side Dual Spline Inner)			95507	93274
1994-96	All engines AT, FWD; non-locking differential			95503	95504
1991-93	All Engines Before 12/31/93			95503	95504

G25		LR	RR	LF	RF
2011-12	AWD			95399	93451

G35		LR	RR	LF	RF
2007-08	AWD			95399	93451
2004-06	AWD			95653	93451
2003-07	All	93101	93184		

G37		LR	RR	LF	RF
2011-14	AWD			95399	93451
2009-10	All			95399	93451

I30		LR	RR	LF	RF
2000-01	All engines AT; locking differential (Left Side Dual Spline Inner)			93501	
2000-01	All engines AT; non-locking differential			93501	93502
2000-01	All Engines MT; non-locking differential			93503	93502
1996-99	All engines MT; non-locking differential			93707	93508
1996-99	All engines MT; locking differential (Left Side Dual Spline Inner)			93509	93508
1996-99	All engines AT; non-locking differential			93507	93508
1996-99	All engines AT; locking differential (Left Side Dual Spline Inner)			93114	93508

I35		LR	RR	LF	RF
2002-04	All engines			93501	93502

M45		LR	RR	LF	RF
2003-04	All engines	93101	93102		

Q45		LR	RR	LF	RF
2002-06	All	93184			
1997-01	All engines	95871	95872		

QX4		LR	RR	LF	RF
1997-03	All engines			93875	93875

QX56		LR	RR	LF	RF
2004-12	All engines			93876	93876

Isuzu

Amigo		LR	RR	LF	RF
1998-00	All engines; complete axle			96576	96576
1998-00	All engines; w/o Inboard joint			40617	40617
1993-94	All engines; Axle w/o I.B. Joint(NTN)			91298	91298
1989-94	All engines; complete axle			96581	96582
1989-94	All engines; wo/ Inboard joint o/b joint stamped NTN			91298	91298
1989-94	All engines; w/o Inboard joint o/b joint stamped NSK			40211	40211

Ascender		LR	RR	LF	RF
2003-08	All engines			70575	70575

Axiom		LR	RR	LF	RF
2002-04	All engines; w/o Inboard joint			96585	
2002-04	All engines; Complete Axle; From 11/01			96585	96585

Hombre		LR	RR	LF	RF
1998-00	All engines			70681	70282

Isuzu cont.

I Mark		LR	RR	LF	RF
1985-89	All engines AT, w/o Turbo; SOHC			96571	96572
1985-89	All engines MT, w/o Turbo; SOHC			96501	96502

I-350		LR	RR	LF	RF
2006	All engines			70116	70116

I-370		LR	RR	LF	RF
2007-08	All engines			70116	70116

Impulse		LR	RR	LF	RF
1991-92	L4-1.6L AWD				96504
1990-92	All engines FWD			96501	96502

Oasis		LR	RR	LF	RF
1998-99	All			91209	91538
1996-97	All engines			91209	91538

Pickup		LR	RR	LF	RF
1994-95	Axle w/o I.B. Joint			91298	91298
1988-95	All engines 4X4; "o/b joint stamped NSK, w/o Inboard joint"			96581	
1988-95	All engines 4X4; complete axle			96581	96582
1988-95	All engines 4X4; o/b joint stamped NTN w/o inboard joint			91298	91298
1988-95	All engines 4X4; "o/b joint stamped NSK, w/o Inboard joint"			40211	40211

Rodeo		LR	RR	LF	RF
2002-04	All engines; complete axle			40227	40227
1998-01	All engines; complete axle			96576	96576
1996-97	All engines; complete axle			96586	96586
1996-97	All engines; w/o inboard joint			40618	40618
1994-95	All engines; o/b joint stamped NTN w/o inboard joint			96581	
1994-95	All engines; complete axle			96581	96582
1993	All engines; o/b joint stamped NTN w/o inboard joint			96581	
1993	All engines; complete axle			96581	96582
1991-92	All engines; o/b joint stamped NTN w/o inboard joint			96581	
1991-92	All engines; complete axle			96581	96582

Rodeo Sport		LR	RR	LF	RF
2002-03	All engines; Complete Axle			40227	40227

Stylus		LR	RR	LF	RF
1992	L4-1.8L MT; DOHC			96501	96202
1991-93	L4-1.6L MT; SOHC			73579	96580
1991-93	L4-1.6L AT; SOHC			73577	73578

Trooper		LR	RR	LF	RF
1996-02	All engines; complete axle			96575	96575
1995	All engines; complete axle			96508	96575
1995	All engines; "from 11/94, w/o inboard joint"			40046	40046
1992-95	ALL; w/o Inboard joint			96230	96230
1988-91	All engines; "o/b joint stamped NSK, w/o Inboard joint"			96581	
1988-91	All engines; o/b joint stamped NTN w/o inboard joint			96581	
1988-91	All engines; Complete Axle			96581	96582
1988-91	All engines; Taiwan Built Axle w/o I.B. Joint			91298	91298
1988-91	All engines; o/b joint stamped NSK, wo/ Inboard joint			40211	40211
1987	All engines; "o/b joint stamped NSK, w/o Inboard joint"			40211	40211

Jaguar

X-Type		LR	RR	LF	RF
2002-08	All engines			55107	55108

Jeep

Cherokee, Grand Cherokee		LR	RR	LF	RF
2005-10	All engines; non-locking differential			74673	
2005-10	All engines; locking differential (Left Side Dual Spline Inner)			74671	74372
1999-04	All engines; w/ Select Drive part time			74013	74014
1999-04	All engines; w/ Quadra-Drive full time			74011	74012
1993-98	All engines			74017	74018
1989-92	All engines			74017	74018
1984-87	All engines; w/ Selec-Trac			74017	74018
1984-87	All engines; w/ Command-trac			74017	72308

Comanche		LR	RR	LF	RF
1986-87	All engines			74017	74018

Commander		LR	RR	LF	RF
2006-10	All engines; non-locking differential			74673	74372
2006-10	All engines; locking differential (Left Side Dual Spline Inner)			74671	74372

Jeep cont.

Compass		LR	RR	LF	RF
2007-12	4WD			72221	72175
2007-12	FWD			72221	72222
2007-12	All engines FWD MT / AT Except CVT			72221	72222
2007-12	All engines 4WD			72221	72175
2007-11	L4-2.0L CVT			72221	72224

Liberty		LR	RR	LF	RF
2008-12	All			72481	72479
2007	V6-3.7L			74571	74272
2006	V6-3.7L			74571	74272
2006	L4-2.8L			74677	74278
2005	V6-3.7L			74571	74272
2005	"L4-2.4L, L4-2.8L"			74677	74278
2002-04	V6-3.7L			74571	74272
2002-04	L4-2.4L			74677	74278

Patriot		LR	RR	LF	RF
2007-12	FWD			72221	72222
2007-12	4WD			72221	72175
2007-11	L4-2.0L CVT			72221	72224

Wagoneer		LR	RR	LF	RF
1984-87	All engines			74017	74018

Kia

Amanti		LR	RR	LF	RF
2004-06	All engines			87601	87110

Magentis		LR	RR	LF	RF
2001-05	L4 2.4L			88513	88514
2001-05	6CYL MT			87501	87202
2001-05	6CYL AT			87501	87202

Optima		LR	RR	LF	RF
2002-06	V6-2.7L			87501	87202
2002-06	L4-2.4L			88513	88514
2001	V6-2.5L			87501	87202
2001	L4-2.4L			88513	88514

Rio		LR	RR	LF	RF
2007-11	MT			88432	88434
2006-11	AT; After 10/12/2006			88348	88438
2006	All engines MT; Before 10/12/2006			87107	87108
2006	All engines AT; Before 10/12/2006			87103	87104
2001-05	All engines MT			87607	87608
2001-05	All engines AT; 4-Wheel ABS			87603	87604
2001-05	All engines AT; 4-Wheel ABS			87603	71180

Rio5		LR	RR	LF	RF
2006-12	All Engines MT			88432	88434
2006-12	AT; After 10/12/2006			88348	88438

Rondo		LR	RR	LF	RF
2008-11	From 3/4/08			89103	89110

Sedona		LR	RR	LF	RF
2006-12	All engines			87101	87102
2002-05	All engines			87617	87618

Sephia		LR	RR	LF	RF
2001	All engines MT; From 7/14/00			87609	87612
2001	All engines AT; From 7/14/00			87611	87612
1998-00	All engines MT; To 7/13/00			87615	87614
1998-00	All engines AT; To 7/13/00			87613	87614
1996-97	L4-1.8L MT			87615	87302
1996-97	L4-1.8L AT			98513	87302
1996-97	L4-1.6L; DOHC			98513	87372
1995	L4-1.8L MT			87615	87302
1995	L4-1.8L AT			98611	87302
1995	L4-1.6L; DOHC			87615	87682
1995	L4-1.6L; SOHC			71571	87372
1994	All engines			71571	87682

Sorento		LR	RR	LF	RF
2014	All				87106
2011-13	MT				88422
2011-13	AT			88420	88422
2003-09	All engines			87273	87275

Spectra		LR	RR	LF	RF
2007-09	All engines MT			89527	89528
2007-09	All engines AT			87511	87512
2006	All engines AT; 27 Spline I.B. Joint			87511	87512
2005-06	All engines AT; 25 spline inner joint			87503	87504
2005-06	All engines MT			87507	87187
2004	L4-2.0L MT			89527	89528
2004	L4-2.0L AT			87503	88512
2004	L4-1.8L MT			87609	87612
2004	L4-1.8L AT			87611	87612
2001-03	All engines MT; From 7/14/00			87609	87612
2001-03	All engines AT; From 7/14/00			87611	87612
2000	All engines MT; To 7/13/00			87615	87614
2000	All engines AT; To 7/13/00			87613	87614

Spectra5		LR	RR	LF	RF
2007-09	AT; 27 Spline I.B. Joint			87511	87512
2006	AT; 27 Spline I.B. Joint			87511	87512
2005-07	MT			87507	87187
2005-06	AT; 25 spline inner joint			87503	87504

Continued on next page

Hyundai cont.

Sportage		LR	RR	LF	RF
2005-10	V6-2.7L FWD			89103	89112
2005-10	V6-2.7L AWD	93184	88098	89103	89112
2005-10	L4-2.0L FWD			89103	89110
2005-10	L4-2.0L AWD	88098	88098	89103	89112
2001-02	From 10/20/00			87683	87684
1995-00	All engines; To10/19/00			87687	87688

Land Rover

Discovery		LR	RR	LF	RF
1999-04	All engines 4WD			38261	38263

Freelander		LR	RR	LF	RF
2002-05	All engines	38105	38105	38101	38102

LR3		LR	RR	LF	RF
2005-09	All 4WD			71312	38092

LR4		LR	RR	LF	RF
2010-13	4WD			71312	38092

Range Rover		LR	RR	LF	RF
2003-12	All engines			38350	38352
1996-02	All engines			38323	38321

Range Rover Sport		LR	RR	LF	RF
2006-13	All 4WD			71312	38092

Lexus

CT200h		LR	RR	LF	RF
2011-14	All			90279	90281

ES250		LR	RR	LF	RF
1990-91	All engines			90900	90900

ES300		LR	RR	LF	RF
2002-03	All engines			90611	90612
1997-01	All engines			90601	90602
1992-96	All engines			90910	90910

ES330		LR	RR	LF	RF
2004-06	All engines			90611	90612

ES350		LR	RR	LF	RF
2007-12	All engines			90115	90015

GS350		LR	RR	LF	RF
2007-11	AWD			90569	

GX460		LR	RR	LF	RF
2010-14	All			90675	90675

GX470		LR	RR	LF	RF
2003-09	All engines			90675	90675

IS250		LR	RR	LF	RF
2006-10	All			90569	

IS300		LR	RR	LF	RF
2001-05	All	90091	90089		

IS350		LR	RR	LF	RF
2011-13	AWD			90569	

LX470		LR	RR	LF	RF
1998-07	All engines			90685	90685

LX570		LR	RR	LF	RF
2008-14	All 4WD			90305	90305

RX300		LR	RR	LF	RF
2000-03	All engines	90100	90100		
1999-03	All engines AWD			90603	90604
1999-03	All engines FWD			90905	90905

RX330		LR	RR	LF	RF
2004-06	All engines FWD			90101	90102
2004-06	AWD	90363	90363	90103	90104

RX350		LR	RR	LF	RF
2007-09	All engines FWD			90101	90102
2007-09	AWD	90363	90363	90103	90104

Lincoln

Aviator		LR	RR	LF	RF
2003-05	All engines	71062	71060	71593	71274

Continental		LR	RR	LF	RF
1995-02	All engines			71301	71302
1988-94	All engines			71203	71510

LS		LR	RR	LF	RF
2003-06	All RWD	71240	71242		
2000-02	All engines		71102		

Mark LT		LR	RR	LF	RF
2006-08	All engines			71805	71805

Mark VIII		LR	RR	LF	RF
1993-98	All	71576	71576		

MKS		LR	RR	LF	RF
2009-11	All engines FWD			71370	71569
2009-11	All engines AWD			71370	

MKT		LR	RR	LF	RF
2010-11	FWD			71370	71285

MKX		LR	RR	LF	RF
2011-14	AWD			71248	71252
2007-14	All engines FWD			71248	71250
2007-10	AWD	71492	71494	71248	71252

MKZ		LR	RR	LF	RF
2007-12	V6-3.5L			71172	71613

Navigator		LR	RR	LF	RF
2011-12	All	71189			
2007-12	All			71174	71170
2003-06	All engines 4WD; w/ 9.75" Ring Gear	71545	71543	71805	71805
1998-02	All engines			71875	71875

Zephyr		LR	RR	LF	RF
2006	All engines			98501	72062

Mazda

3		LR	RR	LF	RF
2010	L4-2.5L MT			98103	47952
2010	L4-2.5L AT			47951	98261
2007-10	L4-2.0L MT			98103	47952
2007-10	L4-2.0L AT			47951	98261
2007-10	L4 2.3L MT Turbo			98319	47952
2007-09	L4-2.3L MT 6 Spd			98319	98261
2007-09	L4-2.3L MT, w/o Turbo			98103	47952
2007-09	L4-2.3L AT			98103	98261
2006	L4-2.3L MT			98103	98104
2006	L4-2.3L AT			98107	98261
2006	L4-2.0L MT			98103	98104
2006	L4-2.0L AT			47951	98263
2004-05	L4-2.3L MT; OBJ retained by bolt			98110	98111
2004-05	L4-2.3L MT; OBJ retained by spidle nut			98103	98104
2004-05	L4-2.3L AT; OBJ retained by bolt			98112	98109
2004-05	L4-2.3L AT; OBJ retained by spidle nut			98107	98102
2004-05	L4-2.0L MT; OBJ retained by bolt			98110	98111
2004-05	L4-2.0L MT; OBJ retained by spidle nut			98103	98104
2004-05	L4-2.0L AT; OBJ retained by bolt			98108	98109
2004-05	L4-2.0L AT; OBJ retained by spidle nut			98101	98102

323		LR	RR	LF	RF
1990-94	All engines			71517	71518
1986-89	All engines FWD; w/o Turbo			71501	71502
1986-87	All engines			71501	71502

5		LR	RR	LF	RF
2006-10	All engines MT			98103	47952
2006-08	All engines AT			98107	98261

6		LR	RR	LF	RF
2008	V6-3.0L MT			98601	98602
2008	V6-3.0L AT			98501	98301
2008	L4-2.3L AT			98573	98274
2008	MT			98117	98118
2006-07	V6-3.0L MT			98601	98602
2006-07	V6-3.0L AT			98501	98301
2006-07	L4-2.3L Turbo w/MT			98119	98120
2006-07	L4-2.3L MT; w/o Turbo			98117	98118
2006-07	L4-2.3L AT			98573	98274
2005	V6-3.0L MT			98601	98602
2005	V6-3.0L AT			98501	98301
2005	L4-2.3L			98573	98274
2003-04	V6-3.0L MT			98601	98602
2003-04	V6-3.0L AT			98603	98301
2003-04	L4-2.3L			98573	98274

626		LR	RR	LF	RF
1994-02	V6-2.5L			98507	98204
1994-02	L4-2.0L MT			98507	98204
1994-02	L4-2.0L AT			98503	98204
1993	All engines			98507	98204
1988-92	Non-turbo			98509	98208
1988-91	Turbo			98511	98202
1983-87	All engines			98673	98674

929		LR	RR	LF	RF
1992-95	All engines	98800	98800		

B Series Pick-up		LR	RR	LF	RF
2001-07	All engines From 10/28/99			71597	71276
1998-00	All engines			98577	98278
1987-93	All engines			98373	98374

CX-7		LR	RR	LF	RF
2007-12	All engines FWD			98285	98283

CX-9		LR	RR	LF	RF
2007-12	All engines FWD			98285	98283

GLC		LR	RR	LF	RF
1981-85	All engines			71501	71502

Miata		LR	RR	LF	RF
1999-05	MT	98183	98183		
1995-97	MT	98183	98183		

Millenia		LR	RR	LF	RF
2001-02	V6-2.5L			98607	98608
2001-02	V6-2.3L			98605	98606
1998-00	V6-2.5L			98607	98608
1998-00	V6-2.3L			98707	98608
1997	V6-2.3L			98605	98608
1996-97	V6-2.5L			98707	98608
1995-96	V6-2.3L; 28 spline outboard joint			98707	98608
1995-96	V6-2.3L; 31 spline outboard joint			98605	98606
1995	V6-2.5L			98707	98608

MPV		LR	RR	LF	RF
2002-06	All engines FWD			98196	98198
2000-01	All engines FWD			98617	98618
1996-98	All engines 4WD			98303	98304
1989-95	All engines 4WD			98371	98372

MX3		LR	RR	LF	RF
1994-95	V6-1.8L MT			98213	98214
1994-95	V6-1.8L AT			98513	98214
1994-95	L4-1.6L			98513	98514
1992-93	V6-1.8L MT			98213	98214
1992-93	V6-1.8L AT			98513	98214
1992-93	L4-1.6L			98513	98517

Continued on next page

Mazda cont.

MX-6		LR	RR	LF	RF
1994-97	V6-2.5L			98507	98204
1994-97	L4-2.0L MT			98507	98204
1994-97	L4-2.0L AT			98503	98204
1993	All engines			98507	98204
1988-92	L4-2.2L Non-turbo; except turbo			98509	98208
1988-92	L4-2.2L Turbo; turbo			98511	98202

Protege		LR	RR	LF	RF
2001-03	L4-2.0L MT			98613	98610
2001-03	L4-2.0L AT			98609	98610
2001-03	L4-1.6L MT			98611	98610
2001-03	L4-1.6L AT			98609	98610
1999-00	All MT			98611	98610
1999-00	All AT			98609	98610
1995-98	L4-1.8L MT			98213	87302
1995-98	L4-1.8L AT			98513	87302
1995-98	L4-1.5L; "w/o intermediate shaft (Right Side 36"")"			98513	98517
1995-98	L4-1.5L; "w/ intermediate shaft (Right Side 22 1/2"")"			98513	98514
1990-94	All engines "MT, 2WD"; DOHC			71517	71518
1990-94	All engines 2WD; SOHC			71517	71518

RX-7		LR	RR	LF	RF
1987-91	Turbo	98558	98558		
1986-91	w/o Turbo	98100	98100		

Tribute		LR	RR	LF	RF
2008-11	All engines AT			71529	71204
2008	All engines "MT, 2WD"			11932	71232
2008	Hybrid AT			71529	71204
2005-06	All engines "MT, AWD"			11932	71232
2005-06	All engines "MT, 2WD"			11932	71232
2005-06	All engines	71533	71534		
2005-06	All engines AT			71529	71204
2001-04	L4-2.0L MT			70531	71232
2001-04	L4-2.0L AT			71529	71204
2001-04	All engines	71533	71534		

Mercedes

"280CE, 280E,280SE"		LR	RR	LF	RF
1978-81	All engines "w/24 13/16"" Overall Comp. Length"	76080	76080		

"300D, 300CD"		LR	RR	LF	RF
1977-85	All engines "w/24 13/16"" Overall Comp. Length"	76080	76080		

200		LR	RR	LF	RF
1966-68	All engines	76080	76080		

220&220D		LR	RR	LF	RF
1968-73	All engines "w/24 13/16"" Overall Comp. Length"	76080	76080		

230		LR	RR	LF	RF
1974-78	All engines "w/24 13/16"" Overall Comp. Length"	76080	76080		

240D		LR	RR	LF	RF
1974-83	All engines "w/24 13/16"" Overall Comp. Length"	76080	76080		

250&250C		LR	RR	LF	RF
1968-72	All engines "w/24 13/16"" Overall Comp. Length"	76080	76080		

280C		LR	RR	LF	RF
1973-76	All engines "w/24 13/16"" Overall Comp. Length"	76080	76080		

300TD		LR	RR	LF	RF
1979-85	All engines "w/24 13/16"" Overall Comp. Length"	76080	76080		

380SE		LR	RR	LF	RF
1984-85	All engines "w/24 13/16"" Overall Comp. Length"	76080	76080		

380SEC		LR	RR	LF	RF
1982-83	All engines "w/24 13/16"" Overall Comp. Length"	76080	76080		

380SL		LR	RR	LF	RF
1981-85	All engines "w/24 13/16"" Overall Comp. Length"	76080	76080		

380SLC		LR	RR	LF	RF
1981	All engines "w/24 13/16"" Overall Comp. Length"	76080	76080		

450SE		LR	RR	LF	RF
1973-76	All engines "w/24 13/16"" Overall Comp. Length"	76080	76080		

450SLC&450SEL		LR	RR	LF	RF
1973-80	All engines	76080	76080		

C240		LR	RR	LF	RF
2003-05	4Matic			76526	76524

C280		LR	RR	LF	RF
2006-07	4Matic			76526	76524

C320		LR	RR	LF	RF
2003-05	4Matic			76526	76524

C350		LR	RR	LF	RF
2006-07	4Matic			76526	76524

Mercedes cont.

E320		LR	RR	LF	RF
2000-03	All engines 4Matic (OBJ w/ BOLT)			76078	76792
1998-00	All engines "AWD, 4Matic (OBJ w/ NUT)"			76794	76793

E430		LR	RR	LF	RF
2000-02	4Matic (OBJ w/ BOLT)			76078	76792

GL350		LR	RR	LF	RF
2010-14	AWD			76774	76776

GL450		LR	RR	LF	RF
2007-12	AWD			76774	76776

ML320		LR	RR	LF	RF
2007-09	AWD			76774	76776
1998-03	All engines	76090	76090	76795	76796

ML350		LR	RR	LF	RF
2006-11	AWD			76774	76776
2003-05	All engines	76090	76090	76795	76796

ML430		LR	RR	LF	RF
2000-01	All engines			76795	76796
1999-01	All engines	76090	76090		

ML450		LR	RR	LF	RF
2010-11	All			76774	76776

ML500		LR	RR	LF	RF
2006-07	AWD			76774	76776
2002-05	All engines	76090	76090	76795	76796

ML55		LR	RR	LF	RF
2000-03	All engines	76090	76090	76795	76796

ML550		LR	RR	LF	RF
2008-11	AWD			76774	76776

Mercury

Capri		LR	RR	LF	RF
1991-94	All engines; except turbo			71501	71502

Cougar		LR	RR	LF	RF
1999-02	All engines w/AT (Tooth Style ABS Ring)			71507	71208
1999-02	All engines 6 Cyl w/MT (Window Style ABS Ring)			71513	71212
1999-02	All engines 6 Cyl w/AT (Window Style ABS Ring)			71511	71212
1991-97	8 Cyl "w/8.8"" ABS Ring"	71576	71576		
1989-97	6 Cyl "w/7.5"" ABS Ring"	71575	71575		

Lynx		LR	RR	LF	RF
1984-87	All engines MT From 4/83			71573	71572
1984-87	All engines AT			71571	71572
1983	All engines MT From 4/83			71573	71572

Mariner		LR	RR	LF	RF
2009-10	w/AT Except Hybrid			71529	71204

Mariner cont.

		LR	RR	LF	RF
2007-08	V6-3.0L w/AT Except Hybrid			71529	71204
2007-08	All	71533	71534		
2006-11	Hybrid CVT Transmission			71217	71204
2005-06	AT			71529	71204
2005-06	All	71533	71534		

Milan		LR	RR	LF	RF
2010-11	V6-3.0L			72060	72062
2010-11	"L4-2.5L, AT"			71176	71178
2007-09	V6-3.0L 6 spd AT			98501	98301
2007-09	L4-2.3L 5 spd AT			98573	98274
2007-09	L4-2.3L MT			98117	98274
2006	L4-2.3L MT			98117	98274
2006	L4 2.3L "AT, 5 speed"			98573	98274
2006	All "AT, 6 speed"			98501	98301

Montego		LR	RR	LF	RF
2005-07	All engines AWD			70687	70774
2005-07	All engines FWD AT			70771	70772
2005-07	All engines CVT			70687	70688

Monterey		LR	RR	LF	RF
2004-07	All engines			71271	72064

Mountaineer		LR	RR	LF	RF
2006-10	All engines AWD	71264	71058	71371	71372
2002-05	All engines			71593	71274
1997-01	All engines			71597	71276

Mystique		LR	RR	LF	RF
1995-00	All engines MT Tooth Style ABS Ring			71509	71208
1995-00	All engines AT Tooth Style ABS Ring			71507	71208
1995-00	All engines MT Window Style ABS Ring			71513	71212
1995-00	All engines AT Window Style ABS Ring			71511	71212

Sable		LR	RR	LF	RF
2008-09	All engines FWD			71370	
2008	All engines AWD			71370	71001
2004-05	All engines			71203	70508
2000-03	All engines; 17 Trans. Pan Bolts			71203	71510
2000-03	All engines; 19 Trans. Pan Bolts			71203	71508
1996-99	V6 3.0L w/AXOD or AX4S Trans			71203	71510
1996-99	All w/AX4N Trans			71203	71508
1994-95	V6-3.8L			71203	71510
1994-95	V6 3.0L w/AXOD or AX4S Trans			71203	71510
1994-95	V6 3.0L w/AX4N Trans			71203	71508
1986-93	V6-3.0L AT			71203	71510

Continued on next page

Mercury cont.

Topaz		LR	RR	LF	RF
1992-94	L4-2.3L MT			71589	71588
1992-94	L4-2.3L AT			71587	71588
1991	All engines MT			71589	71588
1991	All engines AT			71587	71588
1984-90	All engines "MT, 5 speed"; 23 spline inner joint			71573	71572
1984-90	All engines AT			71571	71572

Tracer		LR	RR	LF	RF
1997-99	L4-2.0L MT			71519	71520
1997-99	L4-2.0L AT			71517	71518
1991-96	L4-1.9L Except GT			71517	71518
1991-96	L4-1.8L MT			71519	71202
1991-96	L4-1.8L AT GT			71517	71202
1987-89	All engines			98672	98571

Villager		LR	RR	LF	RF
1993-02	All engines			93601	93602

Mini

Cooper		LR	RR	LF	RF
2008-13	MT Turbo			78330	78332
2007	All engines MT, Hatchback			78100	
2005-08	L4-1.6L AT/Supercharged			78311	
2005-07	L4-1.6L MT, Naturally Aspirated			78096	78098
2002-08	All engines "Base, Automatic CVT"			78199	78200
2002-07	L4-1.6L S Model MT			78203	78204
2002-04	All engines MT; Base Model			78467	78202

Mitsubishi

3000GT		LR	RR	LF	RF
1997-99	All engines SOHC w/MT			89203	89584
1997-99	All engines SOHC w/AT			89203	89584
1997-99	All engines DOHC w/MT			89203	89584
1997-99	All engines DOHC w/AT			89203	89204
1993-96	All engines "MT, FWD"			89203	89584
1993-96	All engines "AT, FWD"			89203	89204
1992-99	All engines AWD			89203	89504
1991-92	All engines "MT, FWD"			89203	89510
1991-92	All engines "AT, FWD"			89203	89508

Cordia		LR	RR	LF	RF
1984-88	L4-1.8L Turbo			89579	88574
1984-88	L4 2.0L Non-turbo			89579	89580
1983	All engines "w/ 2.625"" IBJ"			89573	89574

Diamante		LR	RR	LF	RF
1997-04	All engines			89113	89114
1993-96	All engines Sedan			89203	89504
1993-95	All engines; wagon			89273	89587
1992	All engines			89203	89508

Eclipse		LR	RR	LF	RF
2008-11	L4-2.4L			89352	
2006-08	Turbo				
2006-08	V6-3.8L MT Non				89530
2006-08	L4-2.4L Naturally Aspirated			89352	89365
2006-08	"V6-3.8L, AT" Naturally Aspirated			89529	89530
2000-05	V6-3.0L			89509	89208
2000-05	L4-2.4L			89511	89512
1999	w/o Turbo			72511	72514
1999	L4-2.4L GS SOHC			89601	89602
1999	4CYL AT Turbo			89519	89520
1999	Turbo w/MT			89521	89522
1996-98	Turbo w/MT			89521	89522
1996-98	Turbo w/AT			89519	89520
1996-98	Non-turbo			72511	72514
1996-98	GS SOHC			89601	89602
1995-99	L4-2.0L MT AWD			89207	89518
1995-99	L4-2.0L "AT, AWD"			89207	89514
1995	All engines "MT, FWD"; turbo			89521	89522
1995	All engines "AT, FWD"; turbo			89519	89520
1995	All engines FWD; except turbo			72511	72514
1990-94	L4-2.0L AWD; "GSX, turbo"			89207	89582
1990-94	L4-2.0L FWD			89581	89582
1990-94	L4-1.8L FWD; except turbo			89581	89582

Endeavor		LR	RR	LF	RF
2010-11	All engines AWD			89607	89608
2010-11	All engines FWD			89605	89606
2004-08	All engines AWD			89607	89608
2004-08	All engines FWD			89605	89606

Galant		LR	RR	LF	RF
2010-11	L4-2.4L			89352	
2004-09	"L4-2.4L, ES"			89059	89061
2004-08	V6-3.8L			89529	89530
1999-03	V6-3.0L			89509	89208
1999-03	L4-2.4L			89511	89512
1995-98	All engines			89601	89602
1994	All engines SOHC			89601	89602
1993	All engines			89581	89582
1990-92	All engines AWD MT			89207	89582
1990-92	All engines FWD MT			89581	89582
1988-89	All engines			89581	89582
1985-87	All engines				88572

Continued on next page

Mitsubishi cont.

Lancer		LR	RR	LF	RF
2007	L4-2.0L; exc. Evolution			89117	89118
2004-06	L4-2.4L; exc. Evolution			89119	89120
2004-06	L4-2.0L; exc. Evolution			89117	89118
2003-06	All engines; w/ Evolution AWD			89301	89302
2002-03	All engines; exc. Evolution			89117	89118

Mighty Max		LR	RR	LF	RF
1990-91	All engines AT			89101	89102
1983-89	All engines			89101	89102

Mirage		LR	RR	LF	RF
1997-02	L4-1.8L			89603	89604
1997-02	L4-1.5L			89671	89672
1993-96	L4-1.8L			89581	89502
1993-96	L4-1.5L			89571	89572
1991-92	L4-1.6L MT			88571	88572
1991-92	L4-1.6L AT			88571	89574
1991-92	L4-1.5L			89573	89574
1989	4 Cyl Turbo				88572
1987-90	L4-1.5L Except Turbo			89573	89574
1985-86	4 Cyl Exc Turbo & 4 Spd MT; w/25 Spline IBJ			89583	89578

Montero		LR	RR	LF	RF
2001-06	All engines; except Sport			89131	89133
1997-06	All engines; Sport			89673	89674
1990-91	All engines AT			89101	89102
1983-88	L4-2.6L			89101	89102

Outlander		LR	RR	LF	RF
2007-13	All AWD & FWD			89569	
2003-06	All engines FWD			89127	89128
2003-06	All engines AWD	89123	89124	89121	89122

Pickup		LR	RR	LF	RF
1991-94	4WD			89107	89102
1983-86	AWD			89101	89102

Precis		LR	RR	LF	RF
1990-94	All engines			89583	89574
1987-89	All engines			89583	89578

Raider		LR	RR	LF	RF
2006-09	w/o Off Road Package			72276	72276

Tredia		LR	RR	LF	RF
1984-88	L4-1.8L Turbo			89579	88574
1984-88	Non-turbo			89579	89580
1983	All			89573	89574

Nissan

"280Z, 280ZX"		LR	RR	LF	RF
1981-83	Turbo	93885	93885		
1975-83	Naturally Aspirated	93886	93886		

200SX		LR	RR	LF	RF
1998	L4-2.0L			93131	93422
1995-98	L4-2.0L MT			93639	93640
1995-98	L4-1.6L MT			93753	93752

240SX		LR	RR	LF	RF
1995-98	All engines	93881	93882		
1989-94	All engines	93881	93883		

350Z		LR	RR	LF	RF
2003-09	All	93101	93184		

720 pickup		LR	RR	LF	RF
1983-86	4WD; From 7/83			93871	93872

Altima		LR	RR	LF	RF
2007-12	V6-3.5L CVT			93311	93309
2007-12	L4-2.5L MT			93723	93447
2007-12	L4-2.5L AT CVT; except Hybrid			93058	93056
2007-11	Hybrid			93250	93252
2005-06	V6-3.5L MT			93609	93610
2005-06	V6-3.5L AT			93603	93604
2005-06	L4-2.5L MT			93613	93614
2005-06	L4-2.5L AT			93611	93612
2002-04	V6-3.5L MT			93609	93610
2002-04	V6-3.5L AT; w/ 26 spline inboard joint			93603	93604
2002-04	V6-3.5L AT; w/ 29 spline inboard joint			93117	93118
2002-04	L4-2.5L MT			93613	93614
2002-04	L4-2.5L AT			93611	93612
1998-01	All engines MT			93608	93607
1998-01	All engines AT			93617	93618
1993-97	All engines MT; locking differential (Left Side Dual Spline Inner)			93627	93628
1993-97	All engines MT; non-locking differential			93623	93624
1993-97	All engines AT; locking differential (Left Side Dual Spline Inner)			93621	93620
1993-97	All engines AT; non-locking differential			93619	93620

Armada		LR	RR	LF	RF
2005-14	All engines			93876	93876

AXXESS		LR	RR	LF	RF
1990-95	FWD			93623	93624

CUBE		LR	RR	LF	RF
2009-12	MT				93350
2009-12	CVT			93434	93436

D21		LR	RR	LF	RF
1994	V6-3.0L			93895	93895
1994	L4-2.4L			93875	93875
1990-93	V6-3.0L			93895	93895
1990-93	L4-2.4L			93896	93896
1986-89	All engines			93896	93896

Continued on next page

Nissan cont.

Frontier		LR	RR	LF	RF
2005-14	All engines			93653	93653
1998-04	All engines			93880	93880

Maxima		LR	RR	LF	RF
2009-11	All			93326	93488
2007-08	All engines			93117	93449
2006	All engines MT			93609	93610
2006	All engines AT			93603	93604
2004-05	All engines MT			93609	93610
2004-05	All engines AT 5 speed			93603	93604
2004	All engines AT 4 speed			93117	93118
2002-03	All engines MT			93629	93630
2002-03	All engines AT			93501	93502
2000-01	All engines MT; locking differential (Left Side Dual Spline Inner)			93110	93511
2000-01	All engines MT; non-locking differential			93503	93502
2000-01	All engines AT			93501	93502
1995-99	All engines MT; non-locking differential			93707	93508
1995-99	All engines MT; locking differential (Left Side Dual Spline Inner)			93509	93508
1995-99	All engines AT; non-locking differential			93507	93508
1995-99	All engines AT; locking differential (Left Side Dual Spline Inner)			93114	93508
1992-94	All engines MT; DOHC locking differential (Left Side Dual Spline Inner)			93635	93634
1992-94	All engines MT; DOHC non-locking differential			93633	93634
1992-94	All engines AT; DOHC non-locking differential			93631	93632
1992-94	All engines AT; DOHC locking differential (Left Side Dual Spline Inner)			93622	93632
1992-94	All engines; SOHC			93637	93638
1989-91	All engines; SOHC			93637	93638
1985-88	All engines			93637	93624

Murano		LR	RR	LF	RF
2009-12	All AWD			93452	93141
2009-12	All FWD			93452	93450
2003-07	All engines AWD			93787	93788
2003-07	All engines FWD			93787	93789

NX		LR	RR	LF	RF
1991-93	L4-2.0L MT			93639	93120
1991-93	L4-2.0L AT			93625	93626
1991-93	L4-1.6L AT; Overdrive Button			93751	93752

Pathfinder		LR	RR	LF	RF
2005-10	All engines 4WD			93653	93653
1996-04	All engines			93875	93875

Pathfinder cont.		LR	RR	LF	RF
1990-95	All engines			93895	93895
1987-89	All engines			93896	93896

Pulsar NX		LR	RR	LF	RF
1990	All engines; SOHC			93777	93778
1988-89	L4-1.6L; SOHC			93777	93778
1987	All engines; SOHC			93777	93778
1983-86	All engines			93781	93782

Quest		LR	RR	LF	RF
2004-09	All engines AT 5 Spd			79074	93078
2004-06	All AT 4 speed			93791	93792
1993-02	All engines			93601	93602

Rogue		LR	RR	LF	RF
2008-13	All AWD			93144	93146
2008-12	All FWD			93058	93056

Sentra		LR	RR	LF	RF
2007-12	L4-2.5L MT			93723	93447
2007-12	L4-2.5L AT CVT			93058	93056
2007-12	L4-2.0L MT			93372	93307
2007-12	L4-2.0L AT CVT			93370	93705
2006	L4-1.8L MT			93753	93650
2006	L4-1.8L AT			93753	93642
2002-06	L4-2.5L MT			93649	93650
2002-06	L4-2.5L AT			93647	93648
2002-05	L4-1.8L MT			93753	93644
2002-05	L4-1.8L AT			93753	93642
2000-01	L4-2.0L; locking differential (Left Side Dual Spline Inner)			93751	93120
2000-01	L4-2.0L; non-locking differential			93119	93120
2000-01	L4-1.8L MT			93753	93644
2000-01	L4-1.8L AT			93753	93642
1998-99	L4-2.0L			93131	93422
1995-99	L4-1.6L			93751	93752
1991-94	L4-2.0L MT			93639	93640
1991-94	L4-2.0L AT			93625	93626
1991-94	L4-1.6L MT			93753	93752
1991-94	L4-1.6L "AT, 4 speed"; 25 spline inner joint			93753	93752
1991-92	L4-1.6L "AT, 3 Speed"; 24 spline inner joint			93771	93772
1987-90	L4-1.6L Gas Eng; From 1/86			93777	93778
1982-86	L4-1.6L Except w/Diesel Eng; Before 12/85			93781	93782

Stanza		LR	RR	LF	RF
1990-92	Slip Differential			93651	
1990-92	Except Wagon; w/Non			93651	93652
1990-92	Slip Differential			93637	
1990-92	Except Wagon; w/o Non			93637	93624
1987-92	Slip Differential			93637	
1987-92	Except Wagon; w/o Non			93637	93624
1986-88	2WD&4WD; WAGON			93773	93624

Nissan cont.

Titan		LR	RR	LF	RF
2004-14	All engines			93876	93876

Versa		LR	RR	LF	RF
2009-12	L4-1.6L MT			93660	93662
2007-12	L4-1.8L MT			93377	93350
2007-12	L4-1.8L AT 4 Spd			93345	93347
2007-12	All CVT			93434	93436

Xterra		LR	RR	LF	RF
2005-14	All engines			93653	93653
2000-04	All engines			93880	93880

Oldsmobile

98, Regency		LR	RR	LF	RF
1997-98	V6-3.8L; w/o Supercharger w/3.06 Axle Ratio (FW2)			70291	70594
1997-98	V6-3.8L; w/o Supercharger w/2.84 Axle Ratio (F17)			70291	70572
1995-96	V6-3.8L; w/o Supercharger 3.06 Axle Ratio (FW2)			70291	70594
1995-96	V6-3.8L; w/o Supercharger 2.84 Axle Ratio (F17)			70291	70572
1992-94	V6-3.8L; w/Supercharger			70291	70594
1992-94	V6-3.8L; w/o Supercharger			70291	70572
1991	All			70201	70504
1985-90	All			70201	70502

Achieva		LR	RR	LF	RF
1997	All engines MT				70089
1994-98	All engines "AT, 4 speed"			70211	70512
1992-95	All engines "AT,3 speed"			70293	70672

Alero		LR	RR	LF	RF
2000-04	All engines MT			70121	70122
1999-04	All engines AT SEE NOTE(1)			70375	70375

Aurora		LR	RR	LF	RF
2003	All engines			70285	70285
2001-02	V8-4.0L			70285	70285
2001-02	V6-3.5L			70271	70573
1995-99	V8-4.0L OHC			70285	70285

Bravada		LR	RR	LF	RF
2002-04	All engines			70575	70575
1997-01	All engines			70681	70282
1996	All engines			70885	70885
1991-94	All engines			70885	70885

Calais, Cutlass Calais		LR	RR	LF	RF
1991	AT			70293	70672
1988-90	Quad 4 MT			70123	70202
1988-90	MT; Except Quad 4			70597	70598
1988-90	AT W/O ABS			70202	70582

Calais, Cutlass Calais cont.		LR	RR	LF	RF
1985-87	All engines MT; Except Quad 4			70597	70598
1985-87	All engines AT W/O ABS			70202	70582

Ciera		LR	RR	LF	RF
1994-96	AT 4SPD			70279	70580
1994-96	AT 3SPD			70277	70578
1990-93	HBD 27 Spline OBJ w/4 Spd AT			70283	70584
1990-93	HBD 27 Spline OBJ w/3 Spd AT			70281	70502
1984-89	LBD 33 Spline OBJ w/4 Spd AT			70289	70590
1984-89	LBD 33 Spline OBJ w/3 Spd AT			70202	70588
1984-89	HBD 27 Spline OBJ w/4 Spd AT			70283	70584
1984-89	HBD 27 Spline OBJ w/3 Spd AT			70281	70502
1983	LBD 33 Spline OBJ w/3 Spd AT			70202	70588
1983	HBD 27 Spline OBJ w/3 Spd AT			70281	70502
1982	LBD 33 Spline OBJ w/3 Spd AT			70202	70588

Cutlass		LR	RR	LF	RF
1997-99	All engines AT; SEE NOTE(1)			70375	70375

Cutlass Supreme		LR	RR	LF	RF
1994-97	All engines			70209	70510
1991-93	All engines "AT, 4 speed"; Electronic Trans			70209	70510
1991-93	All engines "AT, 3 speed"			70213	70503
1991-92	All engines "MT, 5SPD"			70209	70511
1991-92	All engines "AT, 4 speed"; w/o Electronic Trans			70209	70511
1988-90	All engines MT			70601	70602
1988-90	All engines "AT, 4 speed"			70209	70511

Eighty-Eight		LR	RR	LF	RF
1998-99	Except Supercharger w/3.05 Axle Ratio (F83)			70203	70594
1998-99	Except Supercharger w/2.86 Axle Ratio (FQ3)			70203	70572
1997	Except Supercharger w/3.06 Axle Ratio (FW2)			70291	70594
1997	Except Supercharger w/2.84 Axle Ratio (F17)			70291	70572
1996	Except Supercharger w/3.06 Axle Ratio (FW2)			70291	70594
1996	Except Supercharger w/2.84 Axle Ratio (F17)			70291	70572
1995	Except Supercharger w/3.06 Axle Ratio (FW2)			70291	70594
1995	Except Supercharger w/2.84 Axle Ratio (F17)			70291	70572
1995	Supercharger			70273	70572
1992-94	All			70291	70594

Oldsmobile cont.

Firenza		LR	RR	LF	RF
1985-87	6CYL MT			70597	70202
1982-88	All engines AT			70202	70582
1982-88	4CYL MT			70597	70598

Intrigue		LR	RR	LF	RF
1998-02	All engines			70271	70572

LSS		LR	RR	LF	RF
1997	All engines; w/o supercharger			70291	70594
1996-99	All engines;			70203	70592
1996	All engines; "w/ 3.06 gear ratio, w/o supercharger"			70291	70594
1996	All engines; "w/ 2.84 gear ratio, w/o supercharger"			70291	70572

Omega		LR	RR	LF	RF
1980-84	All engines MT			70597	70674
1980-84	All engines AT			70202	70588

Silhouette		LR	RR	LF	RF
2002-04	All engines	70275	70275		
2002-04	FWD			70271	70572
2002-04	AWD			70271	70278
1999-01	All engines			70271	70572
1997-98	All engines			70203	70572
1996	All engines			70279	70580
1992-95	All engines "AT, 4 speed"			70279	70580
1992-95	All engines "AT, 3 speed"			70277	70578
1990-91	All engines			70281	70502

Toronado		LR	RR	LF	RF
1992	All engines			70291	70578
1991	All engines			70207	70603
1989-90	All engines			70207	70508
1986-88	All engines			70201	70502
1979-85	All engines			70971	70972
1966-78	All engines			70976	70976

Plymouth

Acclaim		LR	RR	LF	RF
1989-95	All engines; "w/o intermediate shaft (Right Side 39 1/2"")"			72507	72508
1989-95	All engines; "w/ intermediate shaft (Right Side 25 1/4"")"			72507	72507

Breeze		LR	RR	LF	RF
1998	All engines			72501	72502
1996-97	All engines			72503	72504

Caravelle		LR	RR	LF	RF
1987-88	L4-2.2L; turbo			72507	72507
1987-88	All engines; except turbo			72507	72508
1984-86	L4-2.2L Turbo			72575	72575

Caravelle cont.		LR	RR	LF	RF
1984-86	4 Cyl Non-turbo; Except Turbo			72575	72572

Colt, Champ		LR	RR	LF	RF
1993-95	L4-1.5L; except wagon			89571	89572
1993-94	L4-1.8L; except wagon			89501	89502
1992-94	L4-1.8L FWD; VISTA WAGON			89581	89582
1991-92	L4-1.5L Non-turbo; except wagon			89573	89574
1989-90	L4-1.6L MT; except wagon				88572
1989-90	L4-1.6L AT; except wagon				89574
1987-88	L4-1.5L Non-turbo; except turbo			89573	89574

Horizon		LR	RR	LF	RF
1987-90	All engines MT			72571	72574
1987-90	All engines AT			72587	72588
1981-86	L4-2.2L w/o High Performance Package			72571	72574

Laser		LR	RR	LF	RF
1992-94	All engines AWD			89207	89582
1990-94	All engines FWD			89581	89582

Reliant		LR	RR	LF	RF
1987-89	All engines			72507	72508
1984-86	All engines			72575	72572
1982-83	All engines; w/Spring Loaded Design Shaft			72573	72574

Scamp		LR	RR	LF	RF
1983	All engines			72571	72574

Sundance		LR	RR	LF	RF
1991-94	All engines; w/Equal Length Shafts			72507	72508
1991-94	All engines; w/Unequal Length Shafts			72507	72507
1987-90	All engines; w/o turbo			72507	72508
1987-90	Turbo; turbo			72507	72507

Voyager, Grand Voyager		LR	RR	LF	RF
1996-00	All engines FWD			72521	72528
1991-93	All engines AWD			72523	72524
1987-95	All engines FWD; w/Unequal Length Shafts			72523	72530
1987-95	All engines FWD; w/Equal Length Shafts			72523	72523
1984-86	All			72581	72582

Pontiac

6000		LR	RR	LF	RF
1990-91	All engines "AT, 4 speed FWD W/O ABS"; HDB 27 Spline OBJ			70283	70504
1990-91	All engines "AT, 3 speed FWD W/O ABS"; HDB 27 Spline OBJ			70281	70502
1989	All engines "AT, 4 speed FWD"; "20MM Thread, 30MM Nut"			70289	70590
1989	All engines "AT, 4 speed FWD"; "24MM Thread, 36MM Nut"			70283	70584
1989	All engines "AT, 3 speed FWD"; "24MM Thread, 36MM Nut"			70281	70588
1989	All engines "AT, 3 speed FWD"; "20MM Thread, 30MM Nut"			70202	70502
1987-88	LDB 33 Spline OBJ w/4 Spd AT w/o ABS			70289	70590
1987-88	LDB 33 Spline OBJ w/3 Spd AT w/o ABS			70202	70588
1987-88	HDB 27 Spline OBJ w/MT w/o ABS			70677	70678
1987-88	HDB 27 Spline OBJ w/4 Spd AT w/o ABS			70283	70584
1987-88	HDB 27 Spline OBJ w/3 Spd AT w/o ABS			70281	70502
1984-86	LDB 33 Spline OBJ w/4 Spd AT w/o ABS			70289	70590
1984-86	LDB 33 Spline OBJ w/3 Spd AT w/o ABS			70202	70588
1984-86	HDB 27 Spline OBJ w/4 Spd AT w/o ABS			70283	70584
1984-86	HDB 27 Spline OBJ w/3 Spd AT w/o ABS			70281	70502
1983	LDB 33 Spline OBJ w/3 Spd AT w/o ABS			70202	70588
1983	HDB 27 Spline OBJ w/4 Spd AT w/o ABS			70283	70584
1983	HDB 27 Spline OBJ w/3 Spd AT w/o ABS			70281	70502
1982	HDB 27 Spline OBJ w/4 Spd AT w/o ABS			70283	70584
1982	LDB 33 Spline OBJ w/3 Spd AT w/o ABS			70202	70588
1982	HDB 27 Spline OBJ w/4 Spd AT w/o ABS			70283	70584

Aztek		LR	RR	LF	RF
2001-05	All Engines AWD	70275	70275	70299	70676
2001-05	FWD			70299	70591

Bonneville		LR	RR	LF	RF
2004-05	V8-4.6L			70285	70285
2004-05	V6-3.8L			70271	70573
2000-03	All engines Naturally Aspirated; w/o supercharger			70271	70573
2000-03	6 Cyl W/Supercharger; supercharger			70271	70574

Bonneville cont.		LR	RR	LF	RF
1998-99	All engines; w/o supercharger w/3.05 Axle Ratio (F83)			70203	70594
1998-99	All engines; w/o supercharger w/2.86 Axle Ratio (FQ3)			70203	70572
1997	All engines Naturally Aspirated; w/o supercharger w/3.06 Axle Ratio (FW2)			70291	70594
1997	All engines Naturally Aspirated; w/o supercharger w/2.84 Axle Ratio (F17)			70291	70572
1997	W/Supercharger; supercharger			70203	70592
1996	All engines;			70291	70592
1996	All engines; "3.06 gear ratio, w/o supercharger"			70291	70594
1996	All engines; "2.84 gear ratio, w/o supercharger"			70291	70572
1995	All engines;			70291	70572
1995	All engines; "3.06 gear ratio, w/o supercharger"			70291	70594
1995	All engines; "2.84 gear ratio, w/o supercharger"			70291	70572
1992-94	All engines;			70291	70572
1992-94	All engines; w/o supercharger			70291	70594
1987-91	All engines			70201	70502

Fiero		LR	RR	LF	RF
1984-88	All engines MT	70597	70674		
1984-88	All engines AT	70202	70588		

Firefly		LR	RR	LF	RF
1985-88	All engines MT			70679	70680

G3		LR	RR	LF	RF
2009	All engines AT			70111	70112

G5		LR	RR	LF	RF
2007-09	All engines AT			70295	70295

G6		LR	RR	LF	RF
2009-10	L4 2.4L AT 6 speed			72099	72097
2008-09	All engines "AT, 6 speed"; Code MH2			70080	70128
2007-09	V6-3.6L "AT, 6 speed"; Code MH8			70080	
2007	All engines MT; Opt MT2			70127	70128
2006-10	V6-3.5L AT 4 speed			70296	70296
2006-09	V6-3.9L AT 4T-45E Transmission			72339	72341
2006	V6-3.9L MT			70127	70128
2006	L4-2.4L			70296	70296
2005	All engines			70296	70296

Continued on next page

Pontiac cont.

Grand Am		LR	RR	LF	RF
2005	All engines			70375	70375
1999-04	All engines AT			70375	70375
1994-98	All engines AT 4 Spd			70211	70512
1992-95	All engines AT w/3 spd			70293	70672
1990-91	L4-2.3L w/MT Quad 4 2.3L High Output w/o ABS			70123	70202
1990-91	All engines w/AT w/o ABS			70202	70582
1990	w/MT Quad 4 2.3L High Output w/o ABS			70123	70202
1990	w/MT (Except Turbo & Quad 4 2.3L High Outp			70597	70598
1990	w/AT w/o ABS			70202	70582
1989	L4-2.5L MT Quad 4 2.3L High Output w/o ABS			70597	70598
1989	L4-2.3L MT Except Turbo & Quad 4 2.3L High Outp			70597	70202
1989	All engines w/AT w/o ABS			70202	70582
1989	All			70202	70582
1987-88	w/MT Except Turbo & Quad 4 2.3L High Outp			70597	70598
1987-88	w/AT w/o ABS			70202	70582
1987-88	Turbo w/MT			70597	70102
1985-88	w/MT Except Turbo & Quad 4 2.3L High Outp			70597	70598
1985-88	w/AT w/o ABS			70202	70582

Grand Prix		LR	RR	LF	RF
2005-08	V8-5.3L			70203	72354
2005-08	V6-3.8L 3.8L w/o Supercharger			70271	70572
2005-07	V6-3.8L 3.8L w/Supercharger			70271	70592
2000-04	V6-3.8L W/Supercharger; supercharger			70271	70592
2000-04	V6-3.8L Naturally Aspirated; w/o supercharger			70271	70572
2000-03	V6-3.1L			70271	70572
1998-99	V6-3.8L; supercharger			70271	70592
1998-99	V6-3.8L; w/o supercharger			70271	70572
1998-99	V6-3.1L			70273	70572
1997	V6-3.8L; supercharger			70271	70592
1997	V6-3.8L; w/o supercharger			70273	70572
1997	V6-3.1L			70273	70572
1994-96	All engines			70209	70510
1991-93	All engines "AT, 3 speed"			70213	70503
1991-93	6 Cyl MT			70209	70510
1991-93	6 Cyl w/Electronic Trans			70209	70510
1991-93	6 Cyl w/4 Spd AT w/o Electronic Trans			70209	70511

Grand Prix cont.		LR	RR	LF	RF
1989-90	All engines MT			70601	70602
1989-90	All engines "AT, 4 speed"			70209	70511
1989-90	All engines "AT, 3 speed"			70213	70503
1988	All engines AT			70209	70511
1988	MT			70601	70602

Lemans		LR	RR	LF	RF
1988-93	All engines AT			70301	70302

Montana, Trans Sport		LR	RR	LF	RF
2005-09	All			70297	70572
1999-04	All			70271	70272
1997-98	All			70273	70572
1992-96	AT 4 Spd			70279	70580
1992-95	AT 3SPD			70277	70578
1990-91	All			70281	70502

Optima		LR	RR	LF	RF
1988-91	All engines			70301	70302

Phoenix		LR	RR	LF	RF
1980-84	All engines MT			70597	70674
1980-84	All engines AT			70202	70588

Pursuti		LR	RR	LF	RF
2005-06	MT (Opt MU3)			70501	70295
2005-06	MT (Opt M86)			70671	70673
2005-06	AT			70295	70295

Solstice		LR	RR	LF	RF
2008-09	L4-2.0L MT	70091	70093		

Sunbird&J2000		LR	RR	LF	RF
1992-94	L4 2.0L MT			70513	70514
1992-94	All engines AT			70202	70672
1992-93	V6-3.1L MT			70513	70202
1991	V6-3.1L MT; "w/o intermediate shaft (Right Side 36 1/2"")"			70597	70202
1991	All engines AT			70202	70582
1991	Turbo; "w/ intermediate shaft (Right Side 20 3/4"")"			70597	
1991	4 Cyl MT Non			70597	70598
1986	Turbo			70597	
1986	4 Cyl MT Non			70597	70598
1984-90	All engines MT Turbo; turbo			70597	70102
1984-90	All engines AT			70202	70582
1984-90	Turbo; except turbo			70597	
1984-90	4 Cyl MT Non			70597	70598
1982-83	All AT			70202	70582
1982-83	All MT			70597	70598

Sunburst		LR	RR	LF	RF
1985-88	MT, w/o Turbo			96573	96574
1985-88	AT, w/o Turbo			96571	96572

Continued on next page

Pontiac cont.

Sunfire		LR	RR	LF	RF
2000-05	MT			70519	70520
1997-99	MT			70519	70520
1996	MT			70217	70520
1996	MT			70519	70520
1995	MT			70519	70520

Tempest		LR	RR	LF	RF
1987-91	w/ (FE7) and w/ (FE3)			70202	70582
1987-91	MT			70597	70598

Torrent		LR	RR	LF	RF
2008-09	V6-3.6L "GXP, AWD, FWD"			70069	70067
2008-09	V6-3.4L AWD & FWD			70691	70692
2007-08	V6-3.4L AWD			70691	70692
2006	All engines	70225	70227	70571	10522

Vibe		LR	RR	LF	RF
2009-10	L4-1.8L			70610	90642
2009-10	L4 2.4L FWD			90362	90360
2009-10	L4 2.4L AWD			90190	
2007-08	All engines MT FWD			70610	70609
2007-08	All engines AT FWD			70607	70608
2003-06	All engines 4x2 GT w/MT			70129	70124
2003-06	All engines MT FWD 4x2 Base Model; except GT			70610	70609
2003-06	All engines AT FWD 4x2 Base Model; except GT			70607	70608
2003-06	All engines	90105	90105		
2003-06	AWD			90107	90108

Wave		LR	RR	LF	RF
2005-08	All engines MT			70113	70114
2005-08	All engines AT			70111	70112

Porsche

Boxster		LR	RR	LF	RF
2000-04	MT	75302	75302		

Cayenne		LR	RR	LF	RF
2008-10	All			50110	50110
2003-06	All Engines			50110	50110

Saab

900		LR	RR	LF	RF
1994-98	L4 2.3L AT			80311	80311
1994-98	L4 2.0L			80311	80311
1994-97	V6 2.5L; CSE Naturally Aspirated				80313
1994-97	V6 2.5L			80311	80313
1990-93	All			80051	80052

9000		LR	RR	LF	RF
1994-98	L4 2.3L Turbo			80315	80315
1992-93	Turbo w/AT			80180	
1992-93	All Non			80180	80180
1991-93	L4 2.3L AT Turbo			80315	80315

Saab 9000 cont.

9-2X		LR	RR	LF	RF
2005-06	All			62526	62526
2005	All engines	92671	92672		

9-3		LR	RR	LF	RF
2003-11	L4 2.0L			80082	80082
1999-02	L4 2.0L			80369	80311

9-3X		LR	RR	LF	RF
2010-11	L4 2.0L			80082	80082

9-5		LR	RR	LF	RF
2003-09	FWD			80068	80068
1999-01	All			80060	80060

9-7x		LR	RR	LF	RF
2005-09	All engines			70575	70575

Saturn

" Ion-1, Ion-2, Ion-3"		LR	RR	LF	RF
2005-07	L4-2.2L MT			70777	70778
2005-07	All engines w/ 4 Spd w/AT (Opt MN5)			70295	70295
2005-07	w/AT (Opt M75) (VT)			70777	70780
2005-07	w/AT (Opt M43)			70777	70778
2005-07	MT; Option MU3			70501	70295
2005-07	MT; Option M86			70131	70131
2004	2.2L w/MT (Opt L61)			70777	70778
2004	2.0L w/MT (Opt MU3)			70501	70295
2004	(Opt M43)			70777	70778

Aura		LR	RR	LF	RF
2008	L4-2.4L Hybrid			70296	70296
2007-09	All engines "AT, 6 Speed"			70080	70128
2007-08	L4-2.4L "AT, 4 Speed"			70296	70296

LS, LS1, LS2, LW1, LW2, LW200, LW300		LR	RR	LF	RF
2003	All engines MT			70521	70522
2001-03	MT			70522	70522
2000-03	AT			70206	70206

Outlook		LR	RR	LF	RF
2007-10	All AWD & FWD; w/o intermediate shaft				70380
2007-10	Complete Axle			72304	72306

Relay		LR	RR	LF	RF
2005-07	FWD		70275	70297	
2005-07	FWD		70275	70297	70572

Sky		LR	RR	LF	RF
2008-10	L4-2.0L MT	70091	70093		

S-Series		LR	RR	LF	RF
1994-02	All engines			70523	70524
1991-93	All engines			70527	70528

Continued on next page

Saturn cont.

Vue		LR	RR	LF	RF
2008-10	All			70069	70067
2004-07	V6-3.5L			70304	70257
2004-07	L4-2.2L, L4-2.4L AT			70303	70303
2004-05	L4-2.2L W/CVT			70611	
2002-08	All AWD	70225	70227		
2002-03	V6 3.0L AWD			70571	70280
2002-03	V6 3.0L "MT,FWD"			70577	70284
2002-03	L4-2.2L W/CVT			70611	
2002-03	L4-2.2L AT			70611	70612

Scion					
Tc		**LR**	**RR**	**LF**	**RF**
2005-10	All engines			90609	90610
Xa		**LR**	**RR**	**LF**	**RF**
2004-06	All engines			90607	90608
Xb		**LR**	**RR**	**LF**	**RF**
2008-12	All			90230	90232
2004-06	All engines			90607	90608
xD		**LR**	**RR**	**LF**	**RF**
2008-13	All			90324	90326

Subaru					
All		**LR**	**RR**	**LF**	**RF**
1972-75	All			92370	92370
B9 Tribeca		**LR**	**RR**	**LF**	**RF**
2008-11	All			92296	92296
Baja		**LR**	**RR**	**LF**	**RF**
2003	All			**22200**	**22200**
2004-06	AT Non-Turbo			**22200**	**22200**
2004-06	MT Non-Turbo			**22200**	**22200**
2004-06	Turbo w/AT			92672	92672
2004-06	MT Non-Turbo			92200	92200
2004-06	AT Non-Turbo			92200	92200
2003	All			92200	92200
Brat		**LR**	**RR**	**LF**	**RF**
1982-87	All engines			92275	92275
1978-81	All engines			92370	92370
DL, GL		**LR**	**RR**	**LF**	**RF**
1985-86	4WD	92105	92105		
1981-89	All Hatchback; Except Justy			92275	92275
Forester		**LR**	**RR**	**LF**	**RF**
1998-99	All engines			**22276**	**22276**
2000-02	All engines			**22200**	**22200**
2009-12	All			**22281**	**22281**
2003-08	All engines Except Turbo			**22505**	**22505**
2009-12	All			92281	92281
2004-08	All engines Turbo w/AT			92322	92322
2004-05	From 1/13/05 w/Turbo	92101	92672		
2003-08	All engines Except Turbo			92505	92505
2003	05 Turbo)				
2003	All engines Before 1/13/05 (Except 04	92101	92672		
2001-02	All engines	92671	92672		
2000-02	All engines			92200	92200
1998-99	All engines			92276	92276
1998-00	All engines	92672	92672		

HERI Subaru HD Axles

Our advanced movement compensation design performs well in high mileage vehicles with worn motor mounts and engine struts. The Heri HD Subaru axle eliminates noise and vibration complaints,

All 22### series part numbers incorporate these advanced features.

This axle is the Subaru Problem Solver!

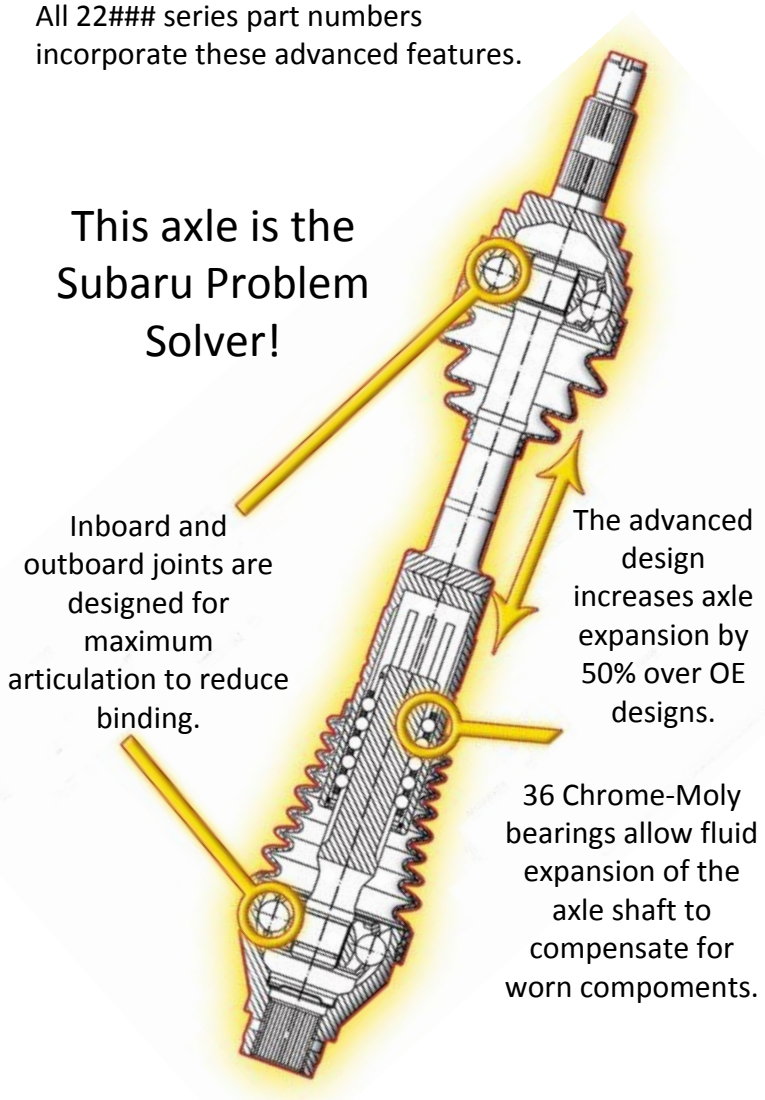

Inboard and outboard joints are designed for maximum articulation to reduce binding.

The advanced design increases axle expansion by 50% over OE designs.

36 Chrome-Moly bearings allow fluid expansion of the axle shaft to compensate for worn compoments.

Tested and proven on moderately lifted Subarus!

Subaru cont.

Impreza		LR	RR	LF	RF
2003	All AWD; Sedan w/AT to 9/03			**22505**	**22505**
2002	H4-2.5L AWD; RS 4 Door Sedan			**22200**	**22200**
2002	H4-2.0L MT Sdn			**22200**	**22200**
1993-99	AWD			**22276**	**22276**
2002	H4-2.0L AT AWD			**22200**	**22200**
2002	TS w/ABS			**22200**	
1993-94	All engines AT; 2WD			**22276**	**22276**
2012-14	WRX			**22281**	**22281**
2002	Outback			**22200**	
2000-01	H4-2.2L AWD			**22276**	**22276**
2003	WRX and Sedan; From 9/03			**22505**	
2003	Outback			**22505**	
2011	All engines AWD			**22100**	**22100**
2005	SW RS & Outback			**22200**	
2005	4 Dr Sedan STI Turbo			**22200**	
2005	H4-2.5L AWD; 4 Dr Sedan RS			**22200**	**22200**
2008-10	All engines AWD			**22100**	**22100**
1995-99	FWD			**22276**	**22276**
2012-14	WRX			92281	92281
2011	All engines AWD			92100	92100
2008-10	All engines AWD			92100	92100
2007	All engines AWD; "2.5L,WRX,STI"			92322	
2007	All engines AWD; "2.5i Sedan, WRX STI"			92322	92322
2007	All engines AWD; "2.5L,Except WRX,STI"			92322	92322
2007	All engines AWD; 2.5i Wagon			62526	62526
2006	All engines AWD; Sedan WRX STI			92322	92322
2006	All engines AWD; Sedan WRX STI			92322	92322
2006	All engines AWD; Outback Sport Wagon			62526	62526
2006	All engines AWD; WRX Wagon			62526	62526
2006	All engines AWD; 2.5i Wagon			62526	62526
2005	H4-2.5L AWD; SW RS & Outback			92672	92672
2005	H4-2.5L AWD; 4 Dr Sedan STI Turbo			92200	92200
2005	H4-2.5L AWD; 4 Dr Sedan RS			92106	92106
2005	H4-2.5L; RS & Outback wagon	92671	92672		
2005	H4-2.0L AWD; RS			62526	62526
2005	H4-2.0L AWD; Outback			62526	62526
2005	H4-2.0L AT AWD; WRX Wagon			92672	92672
2005	H4-2.0L AT AWD; WRX; 4Dr sedan			92322	92322
2005	H4-2.0L MT AWD; WRX Wagon			92322	
2005	H4-2.0L MT AWD; WRX 4 Door Sedan			92322	
2005	H4-2.0L MT AWD; WRX; 5Dr sedan			92322	92322
2005	H4-2.0L MT AWD; WRX; 4Dr sedan			92322	92322
2005	H4-2.0L MT AWD; WRX; wagon			62526	62526
2005	H4-2.0L MT AWD; WRX			62526	62526
2004	All WRX STI			92172	92172
2003	All AWD; WRX and Sedan; From 9/03			92505	92505
2003	All AWD; Outback			92200	92200
2003	All AWD; Sedan w/AT to 9/03			92106	92106
2002-05	H4-2.5L; 4 Door	92101	92672		
2002-05	H4-2.5L; 5 Door	92671	92672		
2002-05	H4-2.0L; 4 Door	92101	92672		
2002-04	H4-2.5L	92671	92672		
2002	H4-2.5L AWD; TS w/ABS			92200	92200
2002	H4-2.5L AWD; Outback			92200	92200
2002	H4-2.5L AWD; RS 4 Door Sedan			92106	92106
2002	H4-2.0L MT Sdn			92200	92200
2002	H4-2.0L MT Wagon			92106	92106
2002	H4-2.0L AT AWD			92200	92200
2001	All engines MT	92671	92672		
2001	All engines AT	92575	92575		
2000-01	H4-2.2L AWD			92276	92276
2000	MT; (Before 12/99)	92672	92672		
2000	MT; (From 5/00)	92671	92672		
2000	MT; (From 1/00 Before 4/00)	92671	92672		
2000	AT; (From 5/00)	92575	92575		
2000	AT; (From 1/00 Before 4/00)	92575	92575		
2000	AT; (Before 12/99)	92575	92575		
1997-99	All engines MT	92672	92672		
1997-99	All engines AT	92575	92575		
1996	H4-2.2L MT	92672	92672		
1996	H4-1.8L MT	92575	92575		
1996	All engines AT	92575	92575		
1995-99	FWD			92276	92276
1995	H4-2.2L	92672	92672		
1995	H4-1.8L	92575	92575		
1993-99	AWD			92276	92276
1993-94	All engines AT; 2WD			92276	92276
1993-94	All engines MT; 2WD			92285	92285
1993-94	All engines	92575	92575		

Subaru cont.

Justy		LR	RR	LF	RF
1991-94	All engines 2WD; w/Equal Length Shafts w/27 Spline OBJ			92286	92286
1990	2WD; w/Unequal Length Shafts w/27 Spline OBJ			92286	
Legacy		**LR**	**RR**	**LF**	**RF**
2005-09	All engines			**22100**	**22100**
2000-04	All engines			**22200**	**22200**
1990-99	All engines 2WD&4WD			**22276**	**22276**
2005-09	All engines			92100	92100
2000-04	All engines	92954	92956	92200	92200
1995-99	All engines	92672	92672		
1990-99	All engines 2WD&4WD			92276	92276
Loyale		**LR**	**RR**	**LF**	**RF**
1990-94	4WD; w/23 Spline IBJ			92776	92776
Outback		**LR**	**RR**	**LF**	**RF**
2005-09	All engines			**22100**	**22100**
2000-04	All engines			**22200**	**22200**
2005-09	All engines			92100	92100
2000-04	All engines	92954	92956	92200	92200
RX		**LR**	**RR**	**LF**	**RF**
1986-89	All engines			92775	92775
Standard		**LR**	**RR**	**LF**	**RF**
1985-87	All engines			92776	92776
1980-84	All engines			92275	92275
1976-79	All engines			92370	92370
SVX		**LR**	**RR**	**LF**	**RF**
1992-97	All engines 2WD&4WD			92776	92776
Wagon		**LR**	**RR**	**LF**	**RF**
1985-86	AWD	92105	92105		
XT		**LR**	**RR**	**LF**	**RF**
1985-91	H4-1.8L Non-turbo			92276	92276
1985-87	H4-1.8L Turbo			92775	92775
1985-86	All engines 4WD	92105	92105		
XV Crosstrek		**LR**	**RR**	**LF**	**RF**
2013-14	All; Except Hybrid			92281	92281
2013-14	All; Except Hybrid			**22281**	**22281**

HERI Subaru HD Axles

Our advanced movement compensation design performs well in high mileage vehicles with worn motor mounts and engine struts. The Heri HD Subaru axle eliminates noise and vibration complaints,

All 22### series part numbers incorporate these advanced features.

This axle is the Subaru Problem Solver!

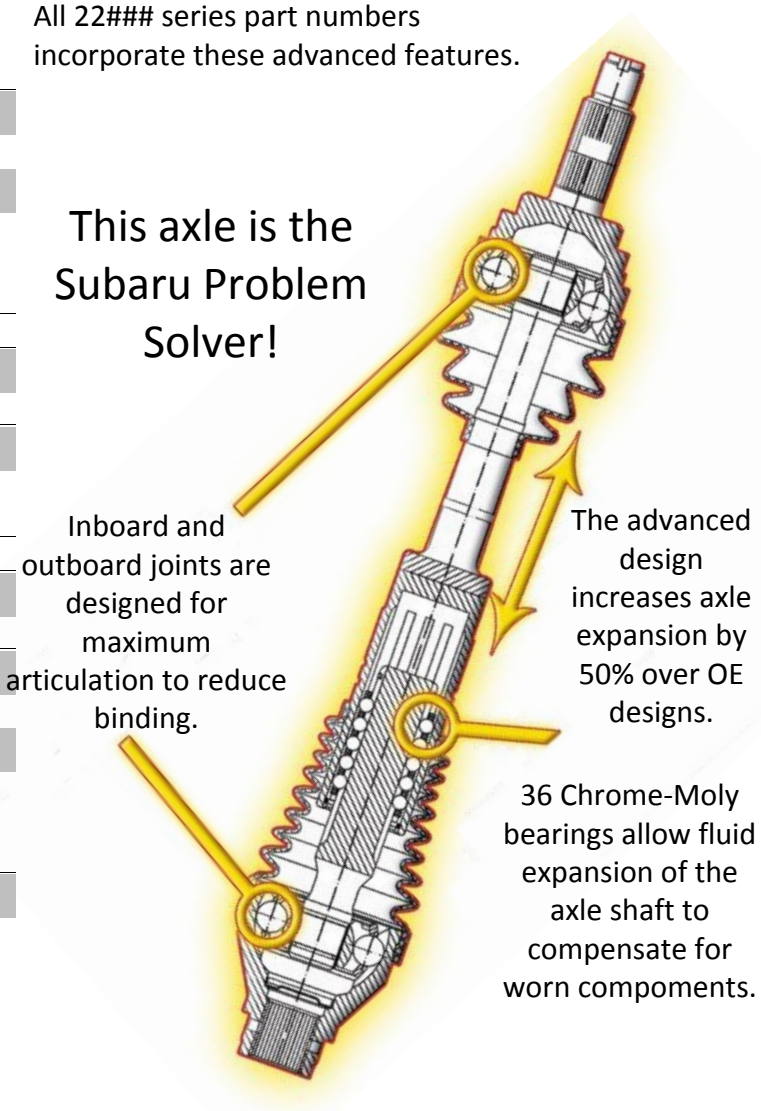

Inboard and outboard joints are designed for maximum articulation to reduce binding.

The advanced design increases axle expansion by 50% over OE designs.

36 Chrome-Moly bearings allow fluid expansion of the axle shaft to compensate for worn compoments.

Tested and proven on moderately lifted Subarus!

Suzuki

Aerio		LR	RR	LF	RF
2004-07	All engines MT			97109	97110
2004-07	All engines AT			97107	97108
2003	All engines "AWD, AT"			97105	97334
2002-03	All engines MT			97109	97112
2002-03	All engines FWD AT			97883	97112

Esteem		LR	RR	LF	RF
1999-02	L4-1.8L MT			97117	97118
1999-02	L4-1.8L AT			97105	97112
1999-01	L4-1.6L MT			97881	97882
1999-01	L4-1.6L AT			97811	97812
1995-98	All engines AT			97811	97812

Forenza		LR	RR	LF	RF
2004-08	All engines MT			97103	97104
2004-08	All engines AT			97101	97102

Grand Vitara		LR	RR	LF	RF
1999-05	All engines AT			97901	97572
1999-05	All engines MT			97871	97113

Reno		LR	RR	LF	RF
2005-08	All engines MT			97103	97104
2005-08	All engines AT			97101	97102

Sidekick		LR	RR	LF	RF
1996-98	L4-1.8L			97871	97574
1996-98	L4-1.6L			97873	97573
1989-95	All engines			97873	97573

Swift		LR	RR	LF	RF
1995-01	All engines MT			73503	73204
1995-01	All engines AT			73501	73502
1989-94	All engines MT; SOHC			97887	
1989-94	All engines MT; DOHC			97887	97888
1989-94	All engines AT; SOHC			97137	
1989-94	All engines AT; DOHC			97137	97138

Verona		LR	RR	LF	RF
2004-06	All engines			70119	70120

Vitara		LR	RR	LF	RF
2004	AT			97871	97572
1999-03	All engines			97901	97572

X-90		LR	RR	LF	RF
1996-98	All engines			97873	97573

XL-7		LR	RR	LF	RF
2007-09	All engines			97471	70067
2004-06	All engines			97871	97119
2002-03	All engines AT			97901	97572
2002-03	All engines MT			97871	97113

Toyota

4Runner		LR	RR	LF	RF
2003-14	All engines			90675	90675
1996-02	All engines			90676	90676
1986-95	All engines			90885	90885

Avalon		LR	RR	LF	RF
2005-12	All engines			90265	90015
2002-04	All engines			90601	90602
1997-01	All engines; Plug-in IBJ			90601	90602
1997	All engines; Bolt-on IBJ			90910	90910
1995-96	All engines			90910	90910

Camry		LR	RR	LF	RF
2010-12	L4-2.5L AT			90115	90015
2007-11	V6-3.5L AT			90115	90015
2007-11	L4 2.4L Hybrid			90143	90159
2007-09	L4 2.4L FWD AT			90121	90122
2004-06	L4-2.4L			90617	90618
2004-06	"V6-3.0L, V6-3.3L"			90101	90102
2002-03	V6-3.0L			90101	90102
2002-03	4 Cyl			90617	90618
1997-01	V6-3.0L MT			90910	90622
1997-01	V6-3.0L AT; Bolt-on style inboard joint			90910	90910
1997-01	V6-3.0L AT; Plug-in style Inboard joint			90601	90602
1997-01	L4-2.2L			90619	90620
1992-96	V6-3.0L			90910	90910
1992-96	L4-2.2L			90619	90620
1988-91	V6-2.5L; Bolt-on style inboard joint			90900	90900
1988-91	6 Cyl 4WD; ALL Trac			90900	90900
1988-91	4 Cyl "AT, FWD"; Bolt-on style inboard joint			90875	90875
1988-91	4 Cyl "AT, FWD"; Plug-in style Inboard joint			90671	90638
1988-91	4 Cyl 4WD; ALL Trac			90613	90614
1984-86	L4-1.8L w/ Turbo Diesel			90875	90803
1983-87	L4 2.0L			90875	90875

Continued on next page

Toyota cont.

Celica		LR	RR	LF	RF
2000-05	All engines; GTS			90627	90628
2000-05	All engines MT; GT			90627	90628
2000-05	All engines AT; GT			90623	90624
1994-99	L4-2.2L MT			90631	90632
1994-99	L4-2.2L AT			90629	90630
1994-97	L4-1.8L			90633	90634
1990-93	L4-2.2L			90637	90638
1990-93	L4-1.6L MT			90501	90502
1990-93	L4-1.6L AT			90109	90674
1988-93	All Engines 4WD; All Trac			90900	90900
1986-89	All engines AT; GTS			90900	90638
1986-89	All engines; "GT, ST"			90875	90875
1986-89	All engines MT; GTS			90671	90638
1982-85	All engines; All Trac	90995	90995		

Corolla		LR	RR	LF	RF
2009-13	L4-1.8L			70610	90642
2009-10	L4 2.4L AT			90362	90360
2005-06	All Engines "MT, 6 speed"; XRS			90107	70124
2003-08	All engines MT			90641	90642
2003-08	All engines AT			90639	90640
1993-02	All engines			90501	90502
1989-93	All engines AWD			90613	90614
1988-92	All engines FWD			90571	90572
1987-88	FX-16 AT			90801	90802
1987-88	FX			90571	90572
1984-87	L4-1.6L; except Diesel			90801	90802

Cressida		LR	RR	LF	RF
1983-84	All engines	90995	90995		

Echo		LR	RR	LF	RF
2000-05	All engines			90607	90608

FJ Cruiser		LR	RR	LF	RF
2007-14	All engines			90675	90675

Highlander		LR	RR	LF	RF
2009-12	FWD				90565
2008-13	V6-3.5L FWD			90451	90565
2008-13	V6-3.5L AWD			90024	90026
2008-12	Hybrid			90265	90612
2006-07	L4-2.4L FWD			90101	90102
2006-07	6 Cyl AWD Except Hybrid	90363	90363	90117	90118
2006-07	4 Cyl FWD Except Hybrid			90647	90648
2004-05	L4-2.4L AWD	90363	90363	90117	90118
2004-05	6 Cyl FWD			90101	90102
2004-05	4 Cyl FWD			90647	90648
2001-03	V6 3.0L FWD			90119	90120
2001-03	All engines AWD	90100	90100		
2001-03	4 Cyl FWD			90647	90648
2001-03	AWD			90117	90118

Land Cruiser		LR	RR	LF	RF
2008-10	All engines			90305	90305

Land Cruiser cont.

		LR	RR	LF	RF
1998-07	All engines			90685	90685

Matrix		LR	RR	LF	RF
2009-13	All			70610	90642
2009-12	L4 2.4L AWD			90190	
2009-12	L4 2.4L FWD			90362	90360
2009-11	L4-1.8L			70610	90642
2007-08	All engines MT FWD			70610	70609
2007-08	All engines AT FWD			90111	90640
2003-06	All engines	90105	90105		
2003-06	All engines "AT, AWD"			90113	90108
2003-06	All engines "MT, 6 speed"; XRS			90107	70124
2003-06	All engines "MT, 5 speed"; except XRS			70610	70609
2003-06	All engines AT			70607	90640

Paseo		LR	RR	LF	RF
1992-99	All engines			90643	90644

Pickup		LR	RR	LF	RF
1986-95	All engines			90885	90885

Previa		LR	RR	LF	RF
1991-97	All engines			90895	90895

Prius		LR	RR	LF	RF
2010-14	All			90279	90281
2004-09	All engines			90135	90137
2001-03	All engines			90113	90114

RAV4		LR	RR	LF	RF
2006-12	L4-2.5L FWD			90244	90246
2006-12	4 Cyl 4WD			90228	90317
2006-10	V6-3.5L 4WD	90453	90453		
2006-10	4WD	90453	90453		
2001-05	All engines 4WD			90649	90650
2001-05	All engines FWD			90609	90610
1996-00	All engines AWD	90497	90405	90613	90614
1996-00	All engines "MT, FWD"			90653	90654
1996-00	All engines "AT, FWD"			90651	90652

Sequoia		LR	RR	LF	RF
2008-13	All engines 4WD			90277	90277
2001-07	All engines 4WD			90686	90686

Sienna		LR	RR	LF	RF
2004-10	All engines AWD	90367	90367	90659	90660
2004-10	All engines FWD			90657	90658
1998-03	All engines			90601	90602

Continued on next page

Toyota cont.

Solara		LR	RR	LF	RF
2004-08	V6-3.3L AT 5 Spd			90101	90102
2004-08	L4-2.4L AT 4 spd			90617	90618
2004-08	4CYL MT			90617	90618
2004-08	4CYL AT 5 Spd			90647	90648
2002-03	V6-3.0L MT			N/A	90622
2002-03	V6-3.0L AT			90601	90602
2002-03	L4-2.4L			90619	90620
1999-01	V6-3.0L MT			90910	90622
1999-01	V6-3.0L AT; Plug-in IBJ			90601	90602
1999-01	L4-2.2L			90619	90620
1999-01	6 Cyl; Bolt-on IBJ			90910	90910
T100 PICK UP		**LR**	**RR**	**LF**	**RF**
1993-98	All engines			90876	90876
Tacoma		**LR**	**RR**	**LF**	**RF**
2005-12	All engines			90675	90675
2001-04	All engines			90676	90676
1995-04	All; w/Auto lock hubs			90676	90676
1995-00	All Engines DLX; w/ Manual Hubs			90886	90886
Tercel		**LR**	**RR**	**LF**	**RF**
1991-99	L4-1.5L			90643	90644
1987-90	L4-1.5L; except wagon			90643	90644
1987-88	L4-1.5L; wagon			90677	90678
1983-86	L4-1.5L			90677	90678
Tundra		**LR**	**RR**	**LF**	**RF**
2007-13	All engines			90277	90277
2000-06	All engines			90686	90686
Venza		**LR**	**RR**	**LF**	**RF**
2009-14	L4-2.7L FWD			90567	90565
2009-14	AWD			90567	
2009-14	AWD			90567	90155
2009-14	FWD			90567	90565
Yaris		**LR**	**RR**	**LF**	**RF**
2007-11	All engines			90309	90307

See VW on next page

Volkswagen

Beetle		LR	RR	LF	RF
2008-09	L4-2.5L MT			75977	75978
2006-10	L5-2.5L AT			75194	75578
2006-07	L5-2.5L MT			75977	75978
2006	L4-1.9L MT			75972	75978
2006	L4-1.9L AT/Dual Clutch			75871	75872
2005	L4-2.0L Convertible			75771	75772
2005	L4-2.0L Hatchback w/Steel Wheels			75873	75974
2005	L4-1.9L MT			75970	75978
2005	L4-1.9L Turbo			75871	75872
2005	L4-1.8L MT 5SPD; Turbo Hatchback			77973	75974
2005	L4-1.8L Turbo Hatchback				75974
2005	L4-1.8L Turbo Convertible			75771	75772
2005	L4-1.8L AT/Dual Clutch			75771	75772
2004	L4-1.8L "MT Turbo 6 Spd, & AWP Eng"; aluminum wheels			77973	75978
2004	L4-1.8L "MT Turbo 6 Spd, & AWP Eng"; steel wheels			77973	75103
2003-05	L4-2.0L AT 6 Spd; aluminum wheels			75771	75578
2003-04	L4-2.0L MT w/Steel Wheels			72979	75978
2003-04	L4-2.0L MT w/Aluminum Wheels				75978
2003-04	L4-1.8L AT w/ 6 Spd & w/Aluminum Wheels			75771	
2003-04	L4-1.8L MT Turbo 5 Spd			75973	75974
2002-04	L4-2.0L AT w/Steel Wheels			75873	75974
2002-04	L4-1.9L AT Turbo Diesel			75973	75974
2002-03	L4-1.9L MT Turbo Diesel			75970	75978
2002-03	L4-1.8L "MT Turbo 6 Spd, & AWP Eng"			77973	75103
2002-03	L4-1.8L MT Turbo 5 Spd				75974
2002	L4-2.0L MT			72979	75978
2001	L4-2.0L MT w/Steel Wheels			72979	75978
2001	L4-2.0L MT w/Aluminum Wheels				75978
2001	L4-2.0L AT w/AVH Engine Code w/Steel Wheels				75974
2001	L4-1.9L MT Turbo Diesel			75970	75978
2001	L4-1.8L MT Turbo			75973	75974
2001	L4-1.8L AT w/AEG Engine Code				75974
2001	L4-1.8L AT Turbo w/Headlight Range Control				75974
2000	L4-2.0L MT w/Steel Wheels w/oHeadlight Range Control			72979	75978

Beetle cont.		LR	RR	LF	RF
2000	L4-2.0L MT w/Steel Wheels w/Headlight Range Control				75978
2000	L4-2.0L MT w/Aluminum Wheels				75978
2000	L4-1.9L MT Turbo Diesel			75970	75978
2000	L4-1.8L MT Turbo			75973	75974
1999-00	L4-2.0L AT			75873	75974
1999-00	L4-1.9L AT Turbo Diesel				75974
1999-00	L4-1.8L AT Turbo			75973	75974
1999	L4-2.0L MT			72979	75978
1999	L4-1.9L MT Turbo Diesel			75970	75978
1999	L4-1.8L MT Turbo				75974
1998	L4-2.0L MT			72979	75978
1998	L4-2.0L AT			75877	75878
1998	L4-1.9L MT Turbo Diesel			75970	75978
1998	L4-1.9L AT Turbo Diesel			75973	75974
1966-79	All engines; Air Cooled	75900	75900		

Cabrio		LR	RR	LF	RF
1999-02	All engines MT Convertible			75981	75982
1999-02	All engines AT Convertible; Before VIN 806130			75981	75982
1999-02	All engines AT Convertible; from VIN 806131			75879	75880

Cabriolet		LR	RR	LF	RF
1985-93	All engines			75983	75984

CC		LR	RR	LF	RF
2010-13	AT/Dual Clutch			75972	75104
2009-13	AWD			75309	75321
2009-10	AT , FWD			75309	75310
2009	AT			75372	75774

Corrado		LR	RR	LF	RF
1992-95	V6-2.8L			75977	75980
1990-92	L4-1.8L			75987	75983

Dasher		LR	RR	LF	RF
1974-81	AT			75805	75805

Eos		LR	RR	LF	RF
2007-13	All			75972	75104

Eurovan		LR	RR	LF	RF
1992-00	All engines MT			75906	75906
1992-00	All engines AT			75905	75906

Fox		LR	RR	LF	RF
1987-93	All engines			75805	75805

Continued on next page

Volkswagen cont.

Golf

		LR	RR	LF	RF
2010-13	Automatic Dual Clutch, Alloy Wheels			75883	75552
2006	L4-2.0L "MT Turbo (Vin Code ""K"" 8th Digit)"			75972	75104
2006	L4-2.0L "MT (Vin Code ""J"" 8th Digit) w/Steel Wheels"				75978
2006	L4-2.0L "MT (Vin Code ""J"" 8th Digit) w/Alloy Wheels"			75977	75978
2006	L4-2.0L AT			75972	75104
2006	L4-2.0L MT			75973	75974
2006	L4-1.9L MT			75972	75978
2006	L4-1.9L AT			75881	75882
2006	L4-1.8L MT			75973	75974
2006	L4-1.8L AT			75881	75882
2005	L4-2.0L MT w/Steel Wheels				75978
2005	L4-2.0L MT w/Alloy Wheels			75977	75978
2005	L4-2.0L AT 4 spd				75974
2005	L4-1.9L MT Turbo Diesel 5 Spd			75972	75978
2005	L4-1.9L AT Turbo Diesel 5 Spd			75881	75882
2005	L4-1.8L MT				75974
2005	L4-1.8L AT			75881	75882
2004	L4-2.0L MT w/Steel Wheels				75978
2004	L4-2.0L MT w/Alloy Wheels			75977	75978
2004	L4-1.9L MT Turbo Diesel w/ALH Eng Code			75972	75978
2004	L4-1.9L AT Turbo Diesel w/BEW Eng Code			75881	75882
2004	L4-1.9L AT Turbo Diesel w/ALH Eng Code				75974
2004	L4-1.8L MT			75881	75882
2004	L4-1.8L AT			75881	75882
2003-05	V6-2.8L MT 6 Spd			75881	75882
2003	L4-2.0L MT			75977	75978
2003	L4-1.9L MT Turbo Diesel			75970	75978
2003	L4-1.9L AT Turbo Diesel			75973	75974
2003	L4-1.8L, L4-2.0L MT w/5 Spd.				75974
2003	L4-1.8L MT w/6 Spd.			75971	75107
2003	L4-1.8L AT			75881	75882
2002	L4-2.0L AT				75974
2002	L4-1.9L MT Turbo Diesel			75970	75978
2002	L4-1.9L AT Turbo Diesel				75974
2002	L4-1.8L MT Turbo Gas w/5 Spd.				77974
2002	L4-1.8L AT Turbo Gas				75974
2000-01	V6-2.8L MT				75974

Golf cont.

		LR	RR	LF	RF
2000-01	L4-2.0L MT w/Steel Wheels w/o Headlight Range Control			72979	75978
2000-01	L4-2.0L MT w/Steel Wheels w/Headlight Range Control				75978
2000-01	L4-2.0L MT w/Aluminum Wheels				75978
2000-01	L4-2.0L AT w/Steel Wheels w/oHeadlight Range Control				75974
2000-01	L4-2.0L AT w/Steel Wheels w/Headlight Range Control				75974
2000-01	L4-2.0L AT w/Aluminum Wheels				75974
2000-01	L4-1.9L MT Turbo Diesel			75970	75978
2000-01	L4-1.9L AT Turbo Diesel				75974
2000-01	L4-1.8L MT Turbo Gas w/5 Spd.				75974
2000-01	L4-1.8L AT Turbo Gas			75973	75974
1999	V6-2.8L "MT (Vin Code ""J"" 8th Digit) 6 Cyl"				75974
1999	V6-2.8L "MT (Vin Code ""H"" 8th Digit) 6 Cyl"			75977	75980
1999	V6-2.8L "AT (Vin Code ""J"" 8th Digit) 6 Cyl"				75974
1999	V6-2.8L "AT (Vin Code ""H"" 8th Digit) 6 Cyl"			75977	75980
1999	L4-2.0L "MT (Vin Code ""J"" 8th Digit) w/o Steel Wheels"			72979	75978
1999	L4-2.0L "MT (Vin Code ""J"" 8th Digit) w/Steel Wheels"				75978
1999	L4-2.0L "MT (Vin Code ""J"" 8th Digit) w/Aluminum Wheels"				75978
1999	L4-2.0L "AT (Vin Code ""J"" 8th Digit) w/Steel Wheels"; late body style			75973	75974
1999	L4-2.0L "AT (Vin Code ""J"" 8th Digit) w/Aluminum Wheels"; early body style				75974
1999	L4-2.0L "AT (Vin Code ""H"" 8th Digit) w/o Air Bag"; late body style			75981	75982
1999	L4-2.0L "AT (Vin Code ""H"" 8th Digit) w/o Air Bag"; early body style			75879	75880
1999	L4-1.9L MT			75970	75978
1995-98	L4-1.9L MT Diesel			75981	75982
1995-98	L4-1.9L AT; "w/ 4"" diameter inner joint"			75981	75982
1995-98	4 Cyl MT Gas			75981	75982
1995-98	AT 4 Cyl Gas			75879	75880
1995-97	6 Cyl MT			75977	75980
1995-97	6 Cyl AT			75977	75980
1993-94	4CYL MT			75981	75982
1993-94	4CYL AT			75879	75880

Golf cont.

1985-92	All "MT (GLI & GTI) w/4.00"" IBJ"			75983	75987
1985-92	All "MT (Except GTI & GLI) w/3.75"" IBJ"			75989	75988
1985-92	All "AT (GLI & GTI) w/4.00"" IBJ"			75983	75987
1985-92	All "AT (Except GTI & GLI) w/3.75"" IBJ"			75989	75988
Golf City		LR	RR	LF	RF
2008-09	L4-2.0L "MT (Vin Code ""J"" 8th Digit) w/Alloy Wheels"			75977	75978
2008-09	L4-2.0L "AT (Vin Code ""J"" 8th Digit) 4 Spd"			75973	75974
GTI		LR	RR	LF	RF
2006-13	All			75972	75104

See Jetta on next page

Volkswagen cont.

Jetta		LR	RR	LF	RF
2012-14	MT 6 Spd			75301	75356
2011-13	MT			75554	75556
2011-13	Automatic Dual Clutch, Alloy Wheels				75552
2009-10	L4-2.0L AT/Dual Clutch			75883	
2008-10	L5-2.5L "AT (Vin ""K"" 8th Digit)"			75773	75774
2008-10	L4 2.0L "MT (Vin Code ""K"" 8th Digit)"			75972	75104
2008-10	L4 2.0L "AT (Vin Code ""K"" 8th Digit)"			75972	75104
2007	L5-2.5L AT Sdn			75773	75774
2007	L4 2.0L "AT Sdn (Vin Code ""K"" 8th Digit)"			75972	75104
2007	L4 2.0L AT/Dual Clutch			75873	
2006-07	L4 2.0L MT			75972	75104
2006	L4 2.0L AT			75972	75104
2005-10	L5-2.5L "MT (Vin Code ""K"" 8th digit)"; OBJ retained by bolt			75370	75990
2005-06	L4-1.9L AT sdn			75883	75884
2005	L4-1.9L "MT Diesel Eng (Vin ""K"" 8th Digit)"; OBJ retained by bolt			75370	75990
2005	L4-1.9L "MT (Vin ""J"" or ""M"" 8th Digit)"			75972	75978
2005	L4-1.9L "AT Diesel Eng (Vin ""K"" 8th Digit)"; OBJ retained by bolt			75883	75884
2005	L4-1.9L "AT (Vin ""J"" or ""M"" 8th Digit) SW w/Eng Code"			75881	75882
2005	L4-1.9L "AT (Vin ""J"" or ""M"" 8th Digit) Sdn"				75974
2005	L4-1.8L "MT (Vin ""J"" or ""M"" 8th Digit) 6 Spd"			75971	75107
2005	L4-1.8L "MT (Vin ""J"" or ""M"" 8th Digit) 5 Spd"			75973	75974
2005	L4-1.8L "AT (Vin ""J"" or ""M"" 8th Digit) 5 Spd"			75881	75882
2005	L4-1.8L "AT (Vin ""J"" or ""M"" 8th Digit) 4 Spd"				75974
2005	L4 2.0L "MT (Vin ""J"" or ""M"" 8th Digit) w/Steel Wheels"			72979	75978
2005	L4 2.0L "MT (Vin ""J"" or ""M"" 8th Digit) SW w/Aluminu Wheels"			75977	75978
2005	L4 2.0L "MT (Vin ""J"" or ""M"" 8th Digit) Sdn w/Aluminu Wheels"				75978
2005	L4 2.0L "AT (Vin ""J"" or ""M"" 8th Digit) w/Steel Wheels"			75873	75974
2005	L4 2.0L "AT (Vin ""J"" or ""M"" 8th Digit) w/Aluminum Wheels"			75973	75974
2005	4 Cyl AT			75773	75774
2004	V6-2.8L AT SW 4 Spd			75873	75974

Jetta cont.

		LR	RR	LF	RF
2004	V6-2.8L AT Sdn 4 Spd			75873	75974
2004	L4-1.9L, L4-2.0L AT SW w/Eng Code ALH				75974
2004	L4-1.9L MT w/Eng Code BEW			75972	75978
2004	L4-1.9L MT w/Eng Code ALH			75970	75978
2004	L4-1.9L AT SW w/Eng Code BEW			75881	75882
2004	L4-1.9L AT Sdn				75974
2004	L4-1.8L MT 6 Spd			75971	75107
2004	L4-1.8L MT 5 Spd				75974
2004	L4-1.8L AT 5 Spd			75881	75882
2004	L4-1.8L AT 4 Spd			75973	75974
2004	L4 2.0L MT SW w/Aluminum Wheels			75977	75978
2004	L4 2.0L MT Sdn w/Aluminum Wheels				75978
2004	L4 2.0L AT w/Steel Wheels			75873	75974
2004	L4 2.0L AT w/Aluminum Wheels			75973	75974
2003	L4-2.0L MT w/Steel Wheels			72979	75978
2003	L4-1.9L AT			75873	
2003	L4-1.9L AT Sdn				75974
2003	L4-1.8L AT 5 Spd			75881	75882
2003	L4-1.8L AT 4 Spd				75974
2003	L4 2.0L MT w/Aluminum Wheels				75978
2002	V6-2.8L MT 6 Cyl SW			75973	75974
2002	V6-2.8L MT 6 Cyl Sdn				75974
2002	V6-2.8L AT; late body style				75974
2002	L4-1.9L MT Turbo Diesel			75970	75978
2002	L4-1.9L AT Turbo Diesel; late body style				
2002	L4-1.9L AT Turbo Diesel; early body style				75974
2002	L4-1.8L MT Turbo Gas SW				75974
2002	L4-1.8L MT Turbo Gas Sdn				75974
2002	L4-1.8L AT Turbo Gas 5 Spd; early body style			75881	75882
2002	L4-1.8L AT Turbo Gas 4 Spd				75974
2002	L4 2.0L MT w/Steel Wheels			72979	75978
2002	L4 2.0L MT w/Aluminum Wheels				75978
2002	L4 2.0L AT SW w/Steel Wheels; late body style			75873	
2002	L4 2.0L AT SW w/Steel Wheels; early body style			75873	75974
2002	L4 2.0L AT SW w/Aluminum Wheels; early body style				

Jetta continued on next page

Jetta cont.		LR	RR	LF	RF
2002	L4 2.0L AT SW w/Aluminum Wheels; late body style				75974
2002	L4 2.0L AT Sdn w/Steel Wheels; late body style			75873	
2002	L4 2.0L AT Sdn w/Steel Wheels; early body style			75873	75974
2002	L4 2.0L AT Sdn w/Aluminum Wheels; early body style				
2002	L4 2.0L AT Sdn w/Aluminum Wheels; late body style				75974
2001	V6-2.8L AT			75973	75974
2000-01	L4-1.9L MT Turbo Diesel			75970	75978
2000-01	L4-1.9L AT Turbo Diesel				75974
2000-01	L4-1.8L MT Turbo Gas				75974
2000-01	L4-1.8L AT Turbo Gas			75973	75974
2000-01	L4 2.0L AT w/Steel Wheels			75873	75974
2000-01	L4 2.0L AT w/Aluminum Wheels				75974
2000-01	MT w/Steel Wheels				75978
2000	V6-2.8L MT 6 Cyl			75973	75974
2000	L4 2.0L MT w/Aluminum Wheels			75973	75978
1999-00	L4-1.9L "AT Turbo Diesel (Vin Code ""M"" 8th Digit)"; "3.75"" diameter inner joint"			75973	75974
1999	V6-2.8L "MT (Vin Code ""M"" 8th Digit) 6 Cyl"				75974
1999	V6-2.8L "AT 6 Cyl (Vin Code ""H"" 8th Digit)"			75977	75980
1999	V6-2.8L "AT 6 Cyl (Vin Code ""M"" 8th Digit)"				75974
1999	L4-1.9L "MT Turbo Diesel (Vin Code ""M"" 8th Digit)"			75970	75978
1999	L4-1.9L "AT 4 Cyl (Vin Code ""H"" 8th Digit) w/Turbo"			75879	75880
1999	L4-1.9L "AT 4 Cyl (Vin Code ""H"" 8th Digit) w/o Turbo"			75981	75982
1999	L4 2.0L "MT (Vin Code ""M"" 8th Digit) w/Steel Wheels w/oHeadlight Range Control"			72979	75978
1999	L4 2.0L "MT (Vin Code ""M"" 8th Digit) w/Steel Wheels w/Headlight Range Control"				75978
1999	L4 2.0L "MT (Vin Code ""M"" 8th Digit) w/Aluminum Wheels"				75978
1999	L4 2.0L "AT 4 Cyl (Vin Code ""H"" 8th Digit) w/o Air Bag"			75981	75982
1999	L4 2.0L "AT 4 Cyl (Vin Code ""H"" 8th Digit) w/Air Bag"			75879	75880

Jetta cont.		LR	RR	LF	RF
1999	L4 2.0L "AT (Vin Code ""M"" 8th Digit) w/Steel Wheels w/oHeadlight Range Control"			75873	75974
1999	L4 2.0L "AT (Vin Code ""M"" 8th Digit) w/Steel Wheels w/Headlight Range Control"; "w/ 4"" diameter i				75974
1999	L4 2.0L "AT (Vin Code ""M"" 8th Digit) w/Aluminum Wheels"; "w/ 4"" diameter inner joint"				
1999	L4 2.0L "AT (Vin Code ""M"" 8th Digit) w/Aluminum Wheels"; "3.75"" diameter inner joint"				75974
1999	6 Cyl "MT (Vin Code ""H"" 8th Digit)"			75977	75980
1999	4 Cyl "MT (Vin Code ""H"" 8th Digit) Gas"			75981	75982
1999	4 Cyl "MT (Vin Code ""H"" 8th Digit) Diesel w/oTurb"			75981	75982
1999	4 Cyl "MT (Vin Code ""H"" 8th Digit) Diesel Turbo"			75981	75982
1997-98	4 Cyl AT			75981	75982
1995-98	6 Cyl MT Gas			75981	75982
1995-98	4 Cyl AT			75879	75880
1995-98	MT Diesel			75981	75982
1994-97	6 Cyl AT			75977	75980
1993-94	4CYL MT			75981	75982
1993-94	4CYL AT			75879	75880
1985-92	All Engines "MT (GLI & GTI) w/4.00"" IBJ"			75983	75987
1985-92	All "MT (Except GTI & GLI) w/3.75"" IBJ"			75989	75988
1985-92	All "AT (GLI & GTI) w/4.00"" IBJ"			75983	75987
1985-92	All "AT (Except GTI & GLI) w/3.75"" IBJ"			75989	75988
1980-84	All MT			75991	75992
1980-84	All AT			75991	

See Passat on next page

Volkswagen cont.

Passat		LR	RR	LF	RF
2009-10	L4-2.0L FWD w/AT; w/ ATW 33 spline outboard joint			75773	75774
2009	L4-2.0L 4WD w/AT			75773	75774
2009	L4-2.0L AT; w/AWM 38 spline outboard joint			75972	75104
2006-09	AWD			75309	75321
2006-08	L4-2.0L FWD w/AT			75773	75774
2006-08	L4-2.0L FWD Turbo w/MT; w/AWM 38 spline outboard joint			75972	75104
2006-08	L4-2.0L AWD, Turbo, AT			75773	75774
2006-08	L4-2.0L AWD MT			75972	75104
2006-08	FWD AT			75309	75310
2005	6CYL AT , AWD			77917	77918
2004-05	L4-2.0L FWD			77921	77922
2004-05	L4-1.8 L, V6-2.8L FWD w/MT			77923	77924
2004-05	L4-1.8 L, V6-2.8L FWD w/AT			77921	77922
2004	All AWD MT			77923	77924
2004	6CYL AT , AWD			77917	77918
2003	All AWD MT			77923	77924
2003	6 Cyl AT , AWD			77917	77918
2002-03	All FWD w/MT			77923	77924
2002-03	All FWD w/AT			77921	77922
2002	All AT , AWD			77917	77918
2001	V6-2.8L FWD w/AT (From Vin 050000)			77921	77922
2001	L4-1.8L FWD Turbo Gas w/MT (Eng Code AUG)			77923	77924
2001	L4-1.8L FWD Turbo Gas w/MT (Eng Code ATW)			77813	77814
2001	L4-1.8L FWD Turbo Gas w/AT AWM Eng Code (From Vin 050000)			77921	77922
2001	L4-1.8L FWD Gas w/MT AWM Eng Code			77923	77924
2000	V6-2.8L FWD 6 Cyl w/MT			77923	77924
2000	V6-2.8L FWD 6 Cyl w/AT			77921	77922
2000	L4-1.8L FWD Turbo Gas w/MT (Eng Code AWM or AUG)			77811	77812
2000	L4-1.8L FWD Turbo Gas w/MT (Eng Code ATW)			77813	77814
2000	L4-1.8L FWD Turbo Gas w/AT (Before Vin 049999)			77913	77914
1999-01	All AT , AWD			77917	77918
1998-99	V6-2.8L FWD 6 Cyl w/MT			77923	77924
1998-99	V6-2.8L FWD 6 Cyl w/AT			77921	77922
1998-99	L4-1.8L FWD Turbo Gas w/MT			77811	77812
1998-99	L4-1.8L FWD Turbo Gas w/AT			77913	77914
1995-97	6 Cyl FWD			75977	75980
1995-97	4CYL FWD w/MT			75981	75982
1995-97	4CYL FWD w/AT			75879	75880
1993-94	6 Cyl FWD			75977	75980
1990-94	FWD			75981	75982

Passat CC		LR	RR	LF	RF
2009-10	MT			75972	75104
2009	AT			75372	75774

Phaeton		LR	RR	LF	RF
2004-06	W12-6.0L			75113	75114
2004-06	V8-4.2L			75111	75112

Rabbit		LR	RR	LF	RF
2008-09	All engines MT; OBJ retained by bolt			75370	75990
2008-09	All engines AT; except R32			75773	75774
2006-07	All engines w/MT Except R32; OBJ retained by			75370	75990
2006-07	All engines w/AT Except R32			75773	75774
1975-84	All engines			75991	75992

Routan		LR	RR	LF	RF
2011-12	FWD			72159	72242
2009-10	FWD			72159	72161
2009-10	FWD			72159	72242

Scirocco		LR	RR	LF	RF
1986-88	All			75983	75984
1985-89	"w/8 Valve Eng 3.75"" Dia IBJ"; "3.75"" diameter inner joint"			75989	75992
1975-84	All engines			75991	75992

Tiguan		LR	RR	LF	RF
2009-14	L4 2.0L AWD			75309	75321
2009-14	FWD			75309	75310

Touareg		LR	RR	LF	RF
2009-10	All			50110	50110
2005-08	All			75547	75547
2004-10	Gas Eng			50110	50110
2004-08	All			75547	75547
2004	TDI			75547	75547

Transporter		LR	RR	LF	RF
1966-79	All engines MT	75105	75105		

Vanagagon		LR	RR	LF	RF
1986-92	All engines MT	75999	75999		
1983-92	All engines			75875	75875

Volvo

850 Series		LR	RR	LF	RF
1993-97	All engines FWD			79731	79734

C30		LR	RR	LF	RF
2008-12	L5-2.5L AT			79249	79033

Continued on next page

Volvo cont.

C70		LR	RR	LF	RF
2008-12	L5-2.5L			79249	79033
2001-04	"L5-2.3L, 2.4L, MT" "Coupe, Convertible, Turbo"			79084	
2001-04	"L5-2.3L, 2.4L, AT" Turbo			79269	
2001-04	"L5 2.4L , AT" Turbo				79083
2001-04	"L5 2.3L, AT" Turbo				79083
2001-02	All FWD			79085	79041
2000	FWD AT 5Speed AW55-50SN Trans.MFG Code				79083
2000	All Engines "FWD, AW55-50SN Trans Code"			79269	
2000	"L5-2.3L, 2.4L, MT"			79269	
1999-00	All engines AT			79723	79724

S40		LR	RR	LF	RF
2005-08	"AWD, MT"			79031	79566
2004-11	All Engines AT , FWD			79249	79033
2004	4CYL "Vin Code ""VS"""; 4th & 5th Digit			79711	79712
2001-04	All FWD			79711	79712
2000	All FWD			79079	79081

S60		LR	RR	LF	RF
2009	L5-2.5L AWD, Turbo, AT			79713	79714
2009	AT, Turbo, FWD			79713	79718
2008	L5-2.5L "AT , AWD"; Turbo			79713	79714
2008	AT, Turbo, FWD			79713	79718
2006-07	All engines MT			79721	79722
2006-07	"AT , AWD"; Turbo			79713	79714
2006-07	AT, Turbo, FWD			79721	79722
2002-05	w/o Turbo "AT , FWD"			79713	79718
2002-05	w/ turbo "MT, FWD"			79721	79722
2002-05	w/ turbo "AT , AWD"			79713	79714
2002-05	"MT, FWD"; except Turbo			79717	79722
2002-04	w/o Turbo MT			79727	79722
2001	All engines AT			79713	79718
2001	MT Turbo			N/A	79722
2001	Turbo			79713	
2001	MT Non			79713	79722

S70		LR	RR	LF	RF
1999-00	All AWD			79723	79729
1999-00	FWD Turbo Gas w/AT			79727	79724
1999-00	FWD MT; MT, Naturally Aspirated			79723	79724
1999-00	AT , FWD; Turbo			79723	79724
1999-00	AT , FWD; Non-Turbo			79727	79728
1998	All			79731	79734

S80		LR	RR	LF	RF
2010-13	AWD			79342	
2007-13	FWD			71463	71465
2007-10	AWD; To Chassis #134200			79342	79343

S80 cont.		LR	RR	LF	RF
2006	L5-2.5L AWD			79713	79714
2004-06	All engines AWD			79713	79714
2004-05	All engines w/o Viscous Clutch			79737	79738
2004-05	All engines w/ Viscous Clutch			79737	79740
1999-03	All engines w/o Viscous Clutch			79737	79738
1999-03	All engines w/ Viscous Clutch			79737	79740

V40		LR	RR	LF	RF
2004	All Engines			79711	79712
2000	All Engines			79079	79081

V50		LR	RR	LF	RF
2005-11	All Engines AT; FWD & AWD			79249	79033
2005-07	"AWD, MT"			79031	79566

V70		LR	RR	LF	RF
2008-10	All			71463	71465
2005-07	AWD			79713	79714
2004	All AWD			79713	79714
2002-03	AT , AWD			79713	79714
2001-07	MT, w/o Turbo			79717	79722
2001-07	AT, w/o Turbo			79713	79718
2001-07	AT Turbo			79713	79718
2001-07	MT Turbo			79721	79728
2001	All AT , AWD			79721	79730
1999-00	All AWD			79723	79729
1999-00	MT, w/o Turbo			79723	79724
1999-00	AT, w/o Turbo			79727	79728
1999-00	AT Turbo			79723	79728
1999-00	MT Turbo			79727	79728
1998	All AT , AWD			79731	79732
1998	All FWD			79731	79734
1998	All AWD MT			79731	79734

XC70		LR	RR	LF	RF
2003-07	w/ Turbo AT , AWD			79721	79730
2003-07	AWD			79085	79041

XC90		LR	RR	LF	RF
2008-12	All AWD			79564	79571
2008-12	All FWD			79564	79569
2003-05	L6 2.9L AWD			29066	29068

BUYER'S GUIDE

Part #	Applications	Position
10522	Chevrolet Equinox 06-05; Pontiac Torrent 2006	Front Right
11932	Ford Escape 08-05; Mazda Tribute 08-05	Front Left
11933	Ford Escape 08-05	Front Left
22100	Subaru Impreza 11-08, Legacy 09-05, Outback 09-05	Front Left
	Subaru Impreza 11-08, Legacy 09-05, Outback 09-05	Front Right
22200	Subaru Baja 06-03, Forester 02-00, Impreza 05-02, Legacy 04-00, Outback 04-00	Front Left
	Subaru Baja 06-03, Forester 02-00, Impreza 05-02, Legacy 04-00, Outback 04-00	Front Right
22276	Subaru Forester 99-98, Impreza 01-93, Legacy 99-90	Front Left
	Subaru Forester 99-98, Impreza 01-93, Legacy 99-90	Front Right
22281	Subaru Forester 12-09, Impreza 14-12, XV Crosstrek 14-13	Front Left
	Subaru Forester 12-09, Impreza 14-12, XV Crosstrek 14-13	Front Right
22505	Subaru Forester 08-03, Impreza 2003	Front Left
	Subaru Forester 08-03, Impreza 2003	Front Right
22565	Honda S2000 09-00	Rear Left
22566	Honda S2000 09-00	Rear Right
29066	Volvo XC90 05-03	Front Left
29068	Volvo XC90 05-03	Front Right
36001	Acura TL 08-07	Front Left
36249	Honda Pilot 08-05	Front Left
36263	Honda Odyssey 06-05	Front Left
36264	Honda Odyssey 10-05	Front Right
37320	Hyundai Sonata 08-06	Front Left
37321	Hyundai Sonata 08-06	Front Right
37322	Hyundai Sonata 08-06	Front Left
37324	Hyundai Azera 11-06, Sonata 10-06	Front Left
37325	Hyundai Azera 11-06, Sonata 10-06	Front Right
38092	Land Rover LR3 09-05, LR4 12-10, Range Rover Sport 09-06	Front Right
38101	Land Rover Freelander 05-02	Front Left
38102	Land Rover Freelander 05-02	Front Right
38105	Land Rover Freelander 05-02	Rear Left
	Land Rover Freelander 05-02	Rear Right
38261	Land Rover Discovery 04-99	Front Left
38263	Land Rover Discovery 04-99	Front Right
38321	Land Rover Range Rover 02-96	Front Right
38323	Land Rover Range Rover 02-96	Front Left
38350	Land Rover Range Rover 12-03	Front Left
38352	Land Rover Range Rover 12-03	Front Right
40046	Acura SLX 99-96; Isuzu Trooper 1995	Front Left
	Acura SLX 99-96; Isuzu Trooper 1995	Front Right
40211	Honda Passport 95-94; Isuzu Amigo 94-89, Pickup 95-88, Trooper 91-87	Front Left
	Honda Passport 95-94; Isuzu Amigo 94-89, Pickup 95-88, Trooper 91-87	Front Right
40227	Honda Passport 2002; Isuzu Rodeo 04-02, Rodeo Sport 03-02	Front Left
	Honda Passport 2002; Isuzu Rodeo 04-02, Rodeo Sport 03-02	Front Right
40251	Honda Ridgeline 11-06	Front Left
40252	Honda Ridgeline 11-06	Front Right
40617	Honda Passport 01-98; Isuzu Amigo 00-98	Front Left
	Honda Passport 01-98; Isuzu Amigo 00-98	Front Right
40618	Honda Passport 97-96; Isuzu Rodeo 97-96	Front Left
	Honda Passport 97-96; Isuzu Rodeo 97-96	Front Right
47951	Mazda 3 10-06	Front Left
47952	Mazda 3 10-07, 5 10-06	Front Right
50110	Audi Q7 10-07; Porsche Cayenne 10-03; Volkswagen Touareg 10-04	Front Left
	Audi Q7 10-07; Porsche Cayenne 10-03; Volkswagen Touareg 10-04	Front Right
55107	Jaguar X-Type 08-02	Front Left
55108	Jaguar X-Type 08-02	Front Right
62526	Saab 9-2X 06-05; Subaru Impreza 07-05	Front Left
	Saab 9-2X 06-05; Subaru Impreza 07-05	Front Right
70025	Chevrolet HHR 11-06	Front Right
70067	Chevrolet Equinox 09-08; Pontiac Torrent 09-08; Saturn Vue 10-08; Suzuki XL-7 09-07	Front Right
70069	Chevrolet Equinox 09-08; Pontiac Torrent 09-08; Saturn Vue 10-08	Front Left
70080	Chevrolet Malibu 09-08; Pontiac G6 09-07; Saturn Aura 09-07	Front Left
70082	Hummer H3 10-06, H3T 2009	Front Left
	Hummer H3 10-06, H3T 2009	Front Right
70089	Oldsmobile Achieva 1997	Front Right
70091	Pontiac Solstice 09-08; Saturn Sky 10-08	Rear Left
70093	Pontiac Solstice 09-08; Saturn Sky 10-08	Rear Right
70095	Cadillac CTS 07-03	Rear Left
70097	Cadillac CTS 07-03	Rear Right
70102	Buick Skyhawk 1987; Cadillac Cimarron 88-87; Pontiac Grand Am 88-87, J2000 Sunbird 85-84, Sunbird 90-86	Front Right
70104	Cadillac CTS 12-08, SRX 09-04, STS 11-05	Front Right
70105	Cadillac Catera 01-97	Rear Left
	Cadillac Catera 01-97	Rear Right
70111	Chevrolet Aveo 11-04, Aveo5 11-06; Pontiac G3 2009, Wave 08-05	Front Left
70112	Chevrolet Aveo 11-04, Aveo5 11-06; Pontiac G3 2009, Wave 08-05	Front Right
70113	Chevrolet Aveo 11-04, Aveo5 11-06; Pontiac Wave 08-05	Front Left
70114	Chevrolet Aveo 11-04, Aveo5 11-06; Pontiac Wave 08-05	Front Right
70116	Chevrolet Colorado 12-04; GMC Canyon 12-04; Isuzu i-350 2006, i-370 08-07	Front Left
	Chevrolet Colorado 12-04; GMC Canyon 12-04; Isuzu i-350 2006, i-370 08-07	Front Right
70119	Chevrolet Epica 06-04; Suzuki Verona 06-04	Front Left
70120	Chevrolet Epica 06-04; Suzuki Verona 06-04	Front Right
70121	Oldsmobile Alero 04-00	Front Left
70122	Oldsmobile Alero 04-00	Front Right
70123	Cadillac Cimarron 88-87; Oldsmobile Cutlass Calais 90-88; Pontiac Grand Am 91-90	Front Left
70124	Pontiac Vibe 06-03; Toyota Corolla 06-05, Matrix 06-04	Front Right
70127	Pontiac G6 07-06	Front Left
70128	Chevrolet Malibu 09-08; Pontiac G6 09-06; Saturn Aura 09-07	Front Right
70129	Pontiac Vibe 06-03	Front Left
70131	Chevrolet HHR 10-08; Saturn Ion 07-05	Front Left
	Chevrolet HHR 10-08; Saturn Ion 07-05	Front Right
70135	Chevrolet Cruze 12-11	Front Right
70137	Chevrolet Cruze 14-11	Front Left
70171	Chevrolet Express 1500 13-03, Express 2500 2003; GMC Savana 1500 13-03, Savana 2500 2003	Front Left
	Chevrolet Express 1500 13-03, Express 2500 2003; GMC Savana 1500 13-03, Savana 2500 2003	Front Right
70201	Buick Electra 90-85, LeSabre 91-86, Park Avenue 1991, Riviera 88-86; Cadillac Allante 88-87, DeVille 91-85, Eldorado 88-86, Seville 88-86; Oldsmobile 98 91-85, Toronado 88-86; Pontiac Bonneville 91-87	Front Left

BUYER'S GUIDE

Part #	Applications	Position
70202	Buick Skylark 91-80, Somerset 87-86, Somerset Regal 1985; Cadillac Cimarron 88-82; Chevrolet Beretta 96-87, Cavalier 94-82, Celebrity 89-82, Citation 83-80, Citation II 85-84, Corsica 96-87; Oldsmobile Calais 87-85, Cutlass Calais 90-88, Cutlass	Front Left
	Cadillac Cimarron 88-87; Chevrolet Beretta 91-90, Cavalier 94-85; Oldsmobile Cutlass Calais 90-88, Firenza 87-85; Pontiac Grand Am 91-89, Sunbird 93-91	Front Right
	Pontiac Fiero 88-84	Rear Left
70203	Buick Allure 09-08, LaCrosse 09-08, LeSabre 99-98; Chevrolet Impala 09-06, Monte Carlo 07-06; Oldsmobile 88 99-98, LSS 99-96, Silhouette 98-97; Pontiac Bonneville 99-97, Grand Prix 08-05	Front Left
70205	Chevrolet Cavalier 05-95	Front Left
	Chevrolet Cavalier 05-95	Front Right
70206	Saturn L100 02-01, L200 03-01, L300 03-01, LS 2000, LS1 2000, LS2 2000, LW1 2000, LW2 2000, LW200 03-01, LW300 03-01	Front Left
	Saturn L100 02-01, L200 03-01, L300 03-01, LS 2000, LS1 2000, LS2 2000, LW1 2000, LW2 2000, LW200 03-01, LW300 03-01	Front Right
70207	Buick Reatta 91-88, Riviera 91-89; Cadillac Allante 92-89, DeVille 93-91, Eldorado 91-89, Seville 91-89; Oldsmobile Toronado 91-89	Front Left
70209	Buick Regal 96-88; Chevrolet Lumina 99-90, Monte Carlo 99-95; Oldsmobile Cutlass Supreme 97-88; Pontiac Grand Prix 96-88	Front Left
70211	Buick Skylark 98-94; Chevrolet Beretta 96-94, Corsica 96-94; Oldsmobile Achieva 98-94; Pontiac Grand Am 98-94	Front Left
70213	Chevrolet Lumina 01-90, Monte Carlo 99-95; Oldsmobile Cutlass Supreme 93-91; Pontiac Grand Prix 93-89	Front Left
70217	Chevrolet Cavalier 01-95; Pontiac Sunfire 1996	Front Left
70225	Pontiac Torrent 2006; Saturn Vue 08-02	Rear Left
70227	Pontiac Torrent 2006; Saturn Vue 08-02	Rear Right
70257	Saturn Vue 07-04	Front Right
70271	Buick Allure 09-05, Century 05-00, LaCrosse 09-05, LeSabre 05-00, Lucerne 08-06, Park Avenue 05-97, Regal 04-97, Riviera 99-96; Chevrolet Impala 11-00, Monte Carlo 07-00, Venture 05-99; Oldsmobile Aurora 02-01, Intrigue 02-98, Silhouette 04-99;	Front Left
70272	Buick Terraza 06-05; Chevrolet Uplander 06-05; Pontiac Montana 04-99, Trans Sport 1999	Front Right
70273	Buick Century 99-97, Regal 1997, Riviera 96-95; Chevrolet Venture 98-97; Oldsmobile 88 1995; Pontiac Grand Prix 99-97, Trans Sport 98-97	Front Left
70274	Cadillac CTS 12-08, SRX 09-04, STS 11-05	Front Left
70275	Buick Rendezvous 06-02, Terraza 06-05; Chevrolet Uplander 06-05, Venture 05-02; Oldsmobile Silhouette 04-02; Pontiac Aztek 05-01	Rear Left
	Buick Rendezvous 06-02, Terraza 06-05; Chevrolet Uplander 06-05, Venture 05-02; Oldsmobile Silhouette 04-02; Pontiac Aztek 05-01; Saturn Relay 07-05	Rear Right
70276	Cadillac Allante 1993, DeVille 99-94, Eldorado 02-93, Fleetwood 1996, Seville 97-94	Front Left
	Cadillac Allante 1993, DeVille 99-94, Eldorado 02-93, Fleetwood 1996, Seville 97-94	Front Right
70277	Buick Century 96-94; Chevrolet Lumina APV 95-92; Oldsmobile Cutlass Ciera 96-94, Silhouette 95-92; Pontiac Trans Sport 95-92	Front Left
70278	Chevrolet Venture 04-02; Oldsmobile Silhouette 04-02	Front Right
70279	Buick Century 96-94; Chevrolet Lumina APV 96-92; Oldsmobile Cutlass Ciera 96-94, Silhouette 96-92; Pontiac Trans Sport 96-92	Front Left
70280	Saturn Vue 03-02	Front Right
70281	Buick Century 93-82; Chevrolet Celebrity 90-83, Lumina APV 91-90; Oldsmobile Cutlass Ciera 93-83, Silhouette 91-90; Pontiac 6000 91-83, Trans Sport 91-90	Front Left
70282	Chevrolet Blazer 05-97, S10 04-97; GMC Jimmy 05-97, Sonoma 04-97; Infiniti Q45 04-02; Isuzu Hombre 00-98; Oldsmobile Bravada 01-97	Front Right
70283	Buick Century 93-82; Chevrolet Celebrity 90-84; Oldsmobile Cutlass Ciera 93-84; Pontiac 6000 91-82	Front Left
70284	Saturn Vue 03-02	Front Right
70285	Buick Lucerne 11-06; Cadillac DeVille 05-00, DTS 11-06, Seville 04-98; Oldsmobile Aurora 03-95; Pontiac Bonneville 05-04	Front Left
	Buick Lucerne 11-06; Cadillac DeVille 05-00, DTS 11-06, Seville 04-98; Oldsmobile Aurora 03-95; Pontiac Bonneville 05-04	Front Right
	Cadillac SRX 2007	Rear Right
70286	Cadillac DeVille 05-00, DTS 11-06	Front Left
	Cadillac DeVille 05-00, DTS 11-06	Front Right
70288	Chevrolet S10 04-97; GMC Jimmy 05-97, Sonoma 04-97	Front Right
70289	Buick Century 89-84; Chevrolet Celebrity 89-84; Oldsmobile Cutlass Ciera 89-84; Pontiac 6000 89-84	Front Left
70291	Buick LeSabre 97-92, Park Avenue 96-91, Riviera 93-92; Cadillac DeVille 95-92, Eldorado 93-92, Fleetwood 95-94, Seville 93-92; Oldsmobile 88 97-92, 98 96-92, LSS 97-96, Regency 98-97, Toronado 1992; Pontiac Bonneville 97-92	Front Left
70293	Buick Skylark 95-88; Oldsmobile Achieva 95-92, Cutlass Calais 1991; Pontiac Grand Am 95-92	Front Left
70295	Chevrolet Cobalt 10-05, HHR 11-06; Pontiac G5 09-07, Pursuit 06-05; Saturn Ion 07-05	Front Left
	Chevrolet Cobalt 10-05, HHR 11-06; Pontiac G5 09-07, Pursuit 06-05; Saturn Ion 07-04	Front Right
70296	Chevrolet Malibu 10-04; Pontiac G6 10-05; Saturn Aura 08-07	Front Left
	Chevrolet Malibu 10-04; Pontiac G6 10-05; Saturn Aura 08-07	Front Right
70297	Buick Lucerne 11-09, Park Avenue 05-00, Rendezvous 07-05, Terraza 07-05; Chevrolet Uplander 09-05; Pontiac Montana 09-05; Saturn Relay 07-05	Front Left
70299	Buick Rendezvous 06-02; Pontiac Aztek 05-01	Front Left
70301	Pontiac LeMans 93-88, Optima 91-88	Front Left
70302	Pontiac LeMans 93-88, Optima 91-88	Front Right
70303	Saturn Vue 07-04	Front Left
	Saturn Vue 07-04	Front Right
70304	Saturn Vue 07-04	Front Left
70312	Buick LaCrosse 14-10, Regal 14-11; Chevrolet Impala 2014, Malibu 14-13	Front Right
70314	Buick Allure 2010, LaCrosse 14-10, Regal 14-11; Cadillac XTS 14-13; Chevrolet Impala 2014, Malibu 14-13	Front Left
70375	Chevrolet Classic 05-04, Malibu 05-97; Oldsmobile Alero 04-99, Cutlass 99-97; Pontiac Grand Am 05-99	Front Left
	Chevrolet Classic 05-04, Malibu 05-97; Oldsmobile Alero 04-99, Cutlass 99-97; Pontiac Grand Am 05-99	Front Right
70376	Chevrolet Astro 05-03; GMC Safari 05-03	Front Left
	Chevrolet Astro 05-03; GMC Safari 05-03	Front Right
70380	Buick Enclave 12-08; Chevrolet Traverse 12-09; GMC Acadia 12-07; Saturn Outlook 10-07	Front Right
70385	Chevrolet Astro 02-97; GMC Safari 02-97	Front Right
	Chevrolet Astro 02-97; GMC Safari 02-97	Front Left
70399	Chevrolet Equinox 14-10; GMC Terrain 14-10	Front Right
70401	Chevrolet Equinox 14-10; GMC Terrain 14-10	Front Left
70416	Chevrolet Silverado 2500 HD 14-11, Silverado 3500 HD 14-11; GMC Sierra 2500 HD 14-11, Sierra 3500 HD 14-11	Front Left
	Chevrolet Silverado 2500 HD 14-11, Silverado 3500 HD 14-11; GMC Sierra 2500 HD 14-11, Sierra 3500 HD 14-11	Front Right
70501	Chevrolet Cobalt 08-05; Pontiac Pursuit 06-05; Saturn Ion 07-04	Front Left

BUYER'S GUIDE

Part #	Applications	Position
70502	Buick Century 93-82, Electra 90-85, LeSabre 91-86, Park Avenue 1991, Riviera 88-86; Cadillac Allante 88-87, DeVille 88-85, Eldorado 88-86, Seville 88-86; Chevrolet Celebrity 90-83, Lumina APV 91-90; Oldsmobile 98 90-85, Cutlass Ciera 93-83, Silh	Front Right
70503	Chevrolet Lumina 93-90; Oldsmobile Cutlass Supreme 93-91; Pontiac Grand Prix 93-89	Front Right
70504	Cadillac DeVille 91-89; Oldsmobile 98 1991; Pontiac 6000 91-90	Front Right
70508	Buick Reatta 90-88, Riviera 90-89; Cadillac Allante 92-89, DeVille 93-91, Eldorado 90-89, Seville 90-89; Mercury Sable 05-04; Oldsmobile Toronado 90-89	Front Right
70510	Buick Regal 96-93; Chevrolet Lumina 01-91, Monte Carlo 99-95; Oldsmobile Cutlass Supreme 97-91; Pontiac Grand Prix 96-91	Front Right
70511	Buick Regal 92-88; Chevrolet Lumina 92-90; Oldsmobile Cutlass Supreme 92-88; Pontiac Grand Prix 93-88	Front Right
70512	Buick Skylark 98-94; Chevrolet Beretta 96-94, Corsica 96-94; Oldsmobile Achieva 98-94; Pontiac Grand Am 98-94	Front Right
70513	Chevrolet Beretta 96-92, Cavalier 94-92, Corsica 96-92; Pontiac Sunbird 94-92	Front Left
70514	Chevrolet Beretta 93-92, Cavalier 94-92, Corsica 93-92; Pontiac Sunbird 94-92	Front Right
70518	Chevrolet Cavalier 01-95	Front Right
70519	Chevrolet Cavalier 05-95; Pontiac Sunfire 05-95	Front Left
70520	Chevrolet Cavalier 05-95; Pontiac Sunfire 05-95	Front Right
70521	Saturn L200 2003, L300 2003, LW200 2003, LW300 2003	Front Left
70522	Saturn L100 02-01, L200 03-01, L300 03-01, LW200 03-01, LW300 03-01	Front Left
	Saturn L100 02-01, L200 03-01, L300 03-01, LW200 03-01, LW300 03-01	Front Right
70523	Saturn SC1 02-94, SC2 02-94, SL 02-94, SL1 02-94, SL2 02-94, SW1 99-94, SW2 01-94	Front Left
70524	Saturn SC1 02-94, SC2 02-94, SL 02-94, SL1 02-94, SL2 02-94, SW1 99-94, SW2 01-94	Front Right
70527	Saturn SC 92-91, SC1 1993, SC2 1993, SL 93-91, SL1 93-91, SL2 93-91, SW1 1993, SW2 1993	Front Left
70528	Saturn SC 92-91, SC1 1993, SC2 1993, SL 93-91, SL1 93-91, SL2 93-91, SW1 1993, SW2 1993	Front Right
70531	Ford Escape 04-01; Mazda Tribute 04-01	Front Left
70571	Chevrolet Equinox 06-05; Pontiac Torrent 2006; Saturn Vue 03-02	Front Left
70572	Buick Allure 09-05, Century 05-97, LaCrosse 09-05, LeSabre 99-96, Park Avenue 96-91, Regal 04-97, Rendezvous 07-05, Riviera 93-92, Terraza 07-05; Cadillac DeVille 95-92, Eldorado 93-92, Fleetwood 95-94, Seville 93-92; Chevrolet Impala 11-00, M	Front Right
70573	Buick LeSabre 05-00, Lucerne 11-06, Park Avenue 05-97, Riviera 97-95; Oldsmobile Aurora 02-01; Pontiac Bonneville 05-00	Front Right
70574	Buick Park Avenue 05-97, Riviera 99-96; Pontiac Bonneville 03-00	Front Right
70575	Buick Rainier 07-04; Chevrolet Trailblazer 09-02; GMC Envoy 09-02; Isuzu Ascender 08-03; Oldsmobile Bravada 04-02; Saab 9-7x 09-05	Front Left
	Buick Rainier 07-04; Chevrolet Trailblazer 09-02; GMC Envoy 09-02; Isuzu Ascender 08-03; Oldsmobile Bravada 04-02; Saab 9-7x 09-05	Front Right
70577	Saturn Vue 03-02	Front Left
70578	Buick Century 96-94; Chevrolet Lumina APV 95-92; Oldsmobile Cutlass Ciera 96-94, Silhouette 95-92, Toronado 1992; Pontiac Trans Sport 95-92	Front Right
70580	Buick Century 96-94; Chevrolet Lumina APV 96-92; Oldsmobile Cutlass Ciera 96-94, Silhouette 96-92; Pontiac Trans Sport 96-92	Front Right
70582	Buick Skyhawk 89-82	Front Left
	Buick Skyhawk 89-82, Skylark 91-86, Somerset 87-86, Somerset Regal 1985; Cadillac Cimarron 88-82; Chevrolet Beretta 91-87, Cavalier 91-82, Corsica 91-87; Oldsmobile Calais 87-85, Cutlass Calais 90-88, Firenza 88-82; Pontiac Grand Am 91-85, J2000 8	Front Right
70584	Buick Century 93-84; Chevrolet Celebrity 90-84; Oldsmobile Cutlass Ciera 93-84; Pontiac 6000 89-82	Front Right
70588	Pontiac Fiero 88-84	Rear Right
	Buick Century 89-82, Skylark 85-80; Chevrolet Celebrity 89-82, Citation 83-80, Citation II 85-84; Oldsmobile Cutlass Ciera 89-82, Omega 84-80; Pontiac 6000 89-82, Phoenix 84-80	Front Right
70590	Buick Century 89-84; Chevrolet Celebrity 89-84; Oldsmobile Cutlass Ciera 89-84; Pontiac 6000 89-84	Front Right
70591	Buick Rendezvous 05-02; Pontiac Aztek 05-01	Front Right
70592	Buick Park Avenue 1996, Regal 04-97; Chevrolet Impala 05-04, Monte Carlo 05-04; Oldsmobile LSS 99-96; Pontiac Bonneville 97-96, Grand Prix 06-97	Front Right
70594	Buick LeSabre 99-92, Park Avenue 96-91; Oldsmobile 88 99-92, 98 96-92, LSS 97-96, Regency 98-97; Pontiac Bonneville 99-92	Front Right
70597	Buick Skyhawk 89-82, Skylark 87-80, Somerset 87-86, Somerset Regal 1985; Cadillac Cimarron 86-82; Chevrolet Beretta 91-87, Cavalier 91-82, Celebrity 89-84, Citation 83-80, Citation II 85-84, Corsica 91-87; Oldsmobile Calais 87-85, Cutlass Calais	Front Left
	Pontiac Fiero 88-84	Rear Left
70598	Buick Skyhawk 89-82, Skylark 87-86, Somerset 87-86, Somerset Regal 1985; Cadillac Cimarron 86-82; Chevrolet Beretta 91-87, Cavalier 91-82, Corsica 91-87; Oldsmobile Calais 87-85, Cutlass Calais 90-88, Firenza 88-82; Pontiac Grand Am 90-85, J2000 8	Front Right
70601	Oldsmobile Cutlass Supreme 90-88; Pontiac Grand Prix 90-88	Front Left
70602	Oldsmobile Cutlass Supreme 90-88; Pontiac Grand Prix 90-88	Front Right
70603	Buick Reatta 1991, Riviera 1991; Cadillac Eldorado 1991, Seville 1991; Oldsmobile Toronado 1991	Front Right
70607	Pontiac Vibe 08-03; Toyota Matrix 06-03	Front Left
70608	Pontiac Vibe 08-03	Front Right
70609	Pontiac Vibe 08-03; Toyota Matrix 08-03	Front Right
70610	Pontiac Vibe 10-03; Toyota Corolla 13-09, Matrix 13-03	Front Left
70611	Saturn Vue 05-02	Front Left
70612	Saturn Vue 03-02	Front Right
70671	Chevrolet Cobalt 10-05; Pontiac Pursuit 06-05	Front Left
70672	Buick Skylark 95-88; Chevrolet Beretta 96-87, Cavalier 94-92, Corsica 96-87; Oldsmobile Achieva 95-92, Cutlass Calais 1991; Pontiac Grand Am 95-92, Sunbird 94-92	Front Right
70673	Chevrolet Cobalt 10-05; Pontiac Pursuit 06-05	Front Right
70674	Buick Skylark 85-80; Chevrolet Celebrity 89-84, Citation 83-80, Citation II 85-84; Oldsmobile Omega 84-80; Pontiac Phoenix 84-80	Front Right
	Pontiac Fiero 88-84	Rear Right
70675	Chevrolet Corvette 04-97	Rear Left
	Chevrolet Corvette 04-97	Rear Right
70676	Buick Rendezvous 06-02; Pontiac Aztek 05-01	Front Right
70677	Chevrolet Celebrity 89-84; Pontiac 6000 88-87	Front Left
70678	Chevrolet Celebrity 89-84; Pontiac 6000 88-87	Front Right
70679	Chevrolet Sprint 88-85; Pontiac Firefly 88-85	Front Left
70680	Chevrolet Sprint 88-85; Pontiac Firefly 88-85	Front Right
70681	Chevrolet Blazer 05-97, S10 04-97; GMC Jimmy 05-97, Sonoma 04-97; Infiniti Q45 04-02; Isuzu Hombre 00-98; Oldsmobile Bravada 01-97	Front Left
70683	Chevrolet S10 04-97; GMC Jimmy 05-97, Sonoma 04-97	Front Left

BUYER'S GUIDE

Part #	Applications	Position
70687	Ford Five Hundred 07-05, Freestyle 07-05; Mercury Montego 07-05	Front Left
70688	Ford Five Hundred 07-05, Freestyle 07-05; Mercury Montego 07-05	Front Right
70691	Chevrolet Equinox 09-07; Pontiac Torrent 09-07	Front Left
70692	Chevrolet Equinox 09-07; Pontiac Torrent 09-07	Front Right
70758	Chevrolet HHR 11-06	Front Left
70771	Ford Five Hundred 07-05; Mercury Montego 07-05	Front Left
70772	Ford Five Hundred 07-05; Mercury Montego 07-05	Front Right
70774	Ford Five Hundred 07-05, Freestyle 07-05; Mercury Montego 07-05	Front Right
70777	Saturn Ion 07-04	Front Left
70778	Saturn Ion 07-04	Front Right
70780	Saturn Ion 07-05	Front Right
70805	Chevrolet K1500 Suburban 99-95, K2500 00-88, K2500 Suburban 99-92, K3500 00-88, Tahoe 99-95; GMC K2500 00-88, K2500 Suburban 99-92, K3500 00-88, Yukon 97-95	Front Left
	Chevrolet K1500 Suburban 99-95, K2500 00-88, K2500 Suburban 99-92, K3500 00-88, Tahoe 99-95; GMC K2500 00-88, K2500 Suburban 99-92, K3500 00-88, Yukon 97-95	Front Right
70875	Chevrolet Astro 96-90; GMC Safari 96-90	Front Left
	Chevrolet Astro 96-90; GMC Safari 96-90	Front Right
70876	GMC Jimmy 96-94, Sonoma 96-94	Front Left
	GMC Jimmy 96-94, Sonoma 96-94	Front Right
70885	Chevrolet S10 96-83, S10 Blazer 94-83, Tahoe 96-95; GMC Jimmy 96-83, S15 Jimmy 91-83, Sonoma 96-91; Oldsmobile Bravada 96-91	Front Left
	Chevrolet S10 96-83, S10 Blazer 94-83, Tahoe 96-95; GMC Jimmy 96-83, S15 Jimmy 91-83, Sonoma 96-91; Oldsmobile Bravada 96-91	Front Right
70886	Cadillac Escalade 12-07; Chevrolet Avalanche 12-07, Silverado 1500 12-07, Suburban 1500 12-07, Tahoe 11-07; GMC Sierra 1500 12-07, Yukon 11-07, Yukon XL 1500 12-07	Front Right
	Cadillac Escalade 12-07; Chevrolet Avalanche 12-07, Silverado 1500 12-07, Suburban 1500 12-07, Tahoe 11-07; GMC Sierra 1500 12-07, Yukon 11-07, Yukon XL 1500 12-07	Front Left
70905	Chevrolet Blazer 94-92, K1500 97-88, K1500 Suburban 99-92; GMC K1500 97-88, Yukon 94-92	Front Left
	Chevrolet Blazer 94-92, K1500 97-88, K1500 Suburban 99-92; GMC K1500 97-88, Yukon 94-92	Front Right
70971	Buick Riviera 85-79; Cadillac Eldorado 85-79, Seville 85-79; Oldsmobile Toronado 85-79	Front Left
70972	Buick Riviera 85-79; Cadillac Eldorado 85-79, Seville 85-79; Oldsmobile Toronado 85-79	Front Right
70975	Chevrolet Avalanche 2500 06-02, Silverado 1500 10-04, Silverado 1500 HD 07-01, Silverado 2500 04-99, Silverado 2500 HD 09-01, Silverado 3500 07-01, Silverado 3500 HD 10-07, Suburban 2500 10-00; GMC Sierra 1500 HD 07-01, Sierra 2500 04-99, Sierra	Front Left
	Chevrolet Avalanche 2500 06-02, Silverado 1500 10-04, Silverado 1500 HD 07-01, Silverado 2500 04-99, Silverado 2500 HD 09-01, Silverado 3500 07-01, Silverado 3500 HD 10-07, Suburban 2500 10-00; GMC Sierra 1500 HD 07-01, Sierra 2500 04-99, Sierra	Front Right
70976	Cadillac Eldorado 78-67, Seville 78-76; Oldsmobile Toronado 78-66	Front Left
	Cadillac Eldorado 78-67, Seville 78-76; Oldsmobile Toronado 78-66	Front Right
70985	Cadillac Escalade 06-99; Chevrolet Avalanche 1500 06-02, K1500 99-98, K2500 00-88, Silverado 1500 10-99, Suburban 1500 06-00, Tahoe 06-97; GMC K1500 99-98, K2500 00-88, Sierra 1500 06-99, Yukon 06-95, Yukon XL 1500 06-00	Front Right
	Cadillac Escalade 06-99; Chevrolet Avalanche 1500 06-02, K1500 99-98, K2500 00-88, Silverado 1500 10-99, Suburban 1500 06-00, Tahoe 06-97; GMC K1500 99-98, K2500 00-88, Sierra 1500 06-99, Yukon 06-95, Yukon XL 1500 06-00	Front Left
71001	Ford Taurus 2008, Taurus X 2008; Mercury Sable 2008	Front Right
71005	Ford Aerostar 91-90	Front Right
	Ford Aerostar 91-90	Front Left
71058	Ford Explorer 10-06, Explorer Sport Trac 10-07; Mercury Mountaineer 10-06	Rear Right
71060	Ford Explorer 05-02; Lincoln Aviator 05-03	Rear Right
71062	Ford Explorer 05-02; Lincoln Aviator 05-03	Rear Left
71102	Lincoln LS 02-00	Rear Right
71170	Ford Expedition 13-07, F-150 13-09; Lincoln Navigator 12-07	Front Right
71172	Ford Fusion 12-10; Lincoln MKZ 12-07	Front Left
71174	Ford Expedition 13-07, F-150 13-09; Lincoln Navigator 12-07	Front Left
71176	Ford Fusion 12-10; Mercury Milan 11-10	Front Left
71178	Ford Fusion 12-10; Mercury Milan 11-10	Front Right
71180	Kia Rio 05-01	Front Right
71189	Ford Expedition 13-11; Lincoln Navigator 12-11	Rear Left
71191	Ford Explorer 13-11	Rear Right
71201	Ford Windstar 03-99	Front Left
71202	Ford Escort 96-91; Mercury Tracer 96-91	Front Right
71203	Ford Taurus 07-86; Lincoln Continental 94-88; Mercury Sable 05-86	Front Left
71204	Ford Escape 12-01; Mazda Tribute 11-01; Mercury Mariner 11-05	Front Right
71208	Ford Contour 00-95; Mercury Cougar 02-99, Mystique 00-95	Front Right
71210	Ford Windstar 98-95	Front Right
71212	Ford Contour 00-95; Mercury Cougar 02-99, Mystique 00-95	Front Right
71217	Ford Escape 12-05; Mercury Mariner 11-06	Front Left
71222	Ford Escort 03-98	Front Right
71224	Ford Focus 04-02	Front Right
71228	Ford Taurus 95-89	Front Right
71232	Ford Escape 08-01; Mazda Tribute 08-01	Front Right
71240	Ford Thunderbird 05-02; Lincoln LS 06-03	Rear Left
71242	Ford Thunderbird 05-02; Lincoln LS 06-03	Rear Right
71246	Ford Escape 12-09	Front Left
71248	Ford Edge 14-07; Lincoln MKX 14-07	Front Left
71250	Ford Edge 14-07; Lincoln MKX 14-07	Front Right
71252	Ford Edge 14-07; Lincoln MKX 14-07	Front Right
71264	Ford Explorer 10-06, Explorer Sport Trac 10-07; Mercury Mountaineer 10-06	Rear Left
71271	Ford Freestar 07-04; Mercury Monterey 07-04	Front Left
71274	Ford Explorer 05-02; Lincoln Aviator 05-03; Mercury Mountaineer 05-02	Front Right
71276	Ford Explorer 01-95, Explorer Sport Trac 02-01, Ranger 02-00; Mazda B2300 07-01, B2500 2001, B3000 07-01, B4000 07-01; Mercury Mountaineer 01-97	Front Right
71278	Ford Explorer Sport Trac 05-03, Ranger 11-03	Front Right
71285	Ford Flex 11-09; Lincoln MKT 11-10	Front Right
71301	Lincoln Continental 02-95	Front Left
71302	Lincoln Continental 02-95	Front Right

BUYER'S GUIDE

Part #	Applications	Position
71312	Land Rover LR3 09-05, LR4 12-10, Range Rover Sport 09-06	Front Left
71370	Ford Flex 11-09, Taurus 12-08, Taurus X 09-08; Lincoln MKS 11-09, MKT 11-10; Mercury Sable 09-08	Front Left
71371	Ford Explorer 10-06, Explorer Sport Trac 10-07; Mercury Mountaineer 10-06	Front Left
71372	Ford Explorer 10-06, Explorer Sport Trac 10-07; Mercury Mountaineer 10-06	Front Right
71388	Ford Explorer 13-11	Rear Left
71461	Ford Transit Connect 13-10	Front Left
71463	Volvo S80 13-07, V70 10-08	Front Left
71465	Volvo S80 13-07, V70 10-08	Front Right
71492	Acura CL 03-01; Ford Edge 10-07; Lincoln MKX 10-07	Rear Left
71494	Acura CL 03-01; Ford Edge 10-07; Lincoln MKX 10-07	Rear Right
71501	Ford Aspire 97-94; Mazda 323 89-86, GLC 85-81; Mercury Capri 94-91	Front Left
71502	Ford Aspire 97-94; Mazda 323 89-86, GLC 85-81; Mercury Capri 94-91	Front Right
71503	Ford Aspire 97-94	Front Left
71504	Ford Aspire 97-94	Front Right
71507	Ford Contour 00-95; Mercury Cougar 02-99, Mystique 00-95	Front Left
71508	Ford Taurus 07-94; Mercury Sable 03-94	Front Right
71509	Ford Contour 00-95; Mercury Mystique 00-95	Front Left
71510	Ford Taurus 03-86; Lincoln Continental 94-88; Mercury Sable 03-86	Front Right
71511	Ford Contour 00-95; Mercury Cougar 02-99, Mystique 00-95	Front Left
71512	Ford Windstar 03-01	Front Right
71513	Ford Contour 00-95; Mercury Cougar 02-99, Mystique 00-95	Front Left
71514	Ford Windstar 00-99	Front Right
71517	Ford Escort 03-91; Mazda 323 94-90, Protege 94-90; Mercury Tracer 99-91	Front Left
71518	Ford Escort 03-91; Mazda 323 94-90, Protege 94-90; Mercury Tracer 99-91	Front Right
71519	Ford Escort 02-91; Mercury Tracer 99-91	Front Left
71520	Ford Escort 02-97; Mercury Tracer 99-97	Front Right
71521	Ford Escort 03-98	Front Left
71523	Ford Focus 04-02	Front Left
71527	Ford Taurus 95-89	Front Left
71529	Ford Escape 08-01; Mazda Tribute 11-01; Mercury Mariner 10-05	Front Left
71533	Ford Escape 04-01; Mazda Tribute 06-01; Mercury Mariner 08-05	Rear Left
71534	Ford Escape 04-01; Mazda Tribute 06-01; Mercury Mariner 08-05	Rear Right
71538	Ford Windstar 98-95	Front Left
71543	Ford Expedition 06-03; Lincoln Navigator 06-03	Rear Right
71545	Ford Expedition 06-03; Lincoln Navigator 06-03	Rear Left
71555	Ford Transit Connect 13-10	Front Right
71569	Ford Flex 11-09, Taurus 12-08, Taurus X 09-08; Lincoln MKS 11-09	Front Right
71571	Ford Escort 90-84, Tempo 90-84; Kia Sephia 95-94; Mercury Lynx 87-84, Topaz 90-84	Front Left
71572	Ford Escort 90-83, Tempo 90-84; Mercury Lynx 87-83, Topaz 90-84	Front Right
71573	Ford Escort 90-83, Tempo 90-84; Mercury Lynx 87-83, Topaz 90-84	Front Left
71575	Ford Thunderbird 97-87; Mercury Cougar 97-89	Rear Left
	Ford Thunderbird 97-87; Mercury Cougar 97-89	Rear Right
71576	Ford Thunderbird 1987; Lincoln Mark VIII 98-93; Mercury Cougar 97-91	Rear Left
	Ford Thunderbird 1987; Lincoln Mark VIII 98-93; Mercury Cougar 97-91	Rear Right
71577	Ford Festiva 93-88	Front Left
71578	Ford Focus 11-06	Front Right
71579	Ford Festiva 93-88	Front Left
71580	Ford Festiva 93-88	Front Right
71581	Ford Focus 11-00	Front Left
71582	Ford Focus 11-00	Front Right
71583	Ford Focus 04-00	Front Left
71584	Ford Focus 04-00	Front Right
71587	Ford Tempo 94-91; Mercury Topaz 94-91	Front Left
71588	Ford Tempo 94-91; Mercury Topaz 94-91	Front Right
71589	Ford Tempo 94-91; Mercury Topaz 94-91	Front Left
71593	Ford Explorer 05-02; Lincoln Aviator 05-03; Mercury Mountaineer 05-02	Front Left
71597	Ford Explorer 01-95, Explorer Sport Trac 02-01, Ranger 02-00; Mazda B2300 07-01, B2500 2001, B3000 07-01, B4000 07-01; Mercury Mountaineer 01-97	Front Left
71599	Ford Explorer Sport Trac 05-03, Ranger 11-03	Front Left
71613	Ford Fusion 12-10; Lincoln MKZ 12-07	Front Right
71805	Ford Expedition 06-03, F-150 08-04, F-150 Heritage 2004; Lincoln Mark LT 08-06, Navigator 06-03	Front Left
	Ford Expedition 06-03, F-150 08-04, F-150 Heritage 2004; Lincoln Mark LT 08-06, Navigator 06-03	Front Right
71875	Ford Expedition 02-97, F Super Duty 1997, F-150 03-97, F-250 98-97, F-250 Super Duty 03-99; Lincoln Navigator 02-98	Front Left
	Ford Expedition 02-97, F Super Duty 1997, F-150 03-97, F-250 98-97, F-250 Super Duty 03-99; Lincoln Navigator 02-98	Front Right
71975	Ford Aerostar 97-92	Front Left
	Ford Aerostar 97-92	Front Right
72009	Chrysler 300M 04-02	Front Left
72011	Chrysler 300M 04-02	Front Right
72023	Chrysler Town & Country 00-97; Dodge Grand Caravan 00-97	Rear Left
	Chrysler Town & Country 00-97; Dodge Grand Caravan 00-97	Rear Right
72033	Chrysler 300 13-05; Dodge Charger 13-07, Magnum 08-05	Front Left
72035	Chrysler 300 13-05; Dodge Charger 13-07, Magnum 08-05	Front Right
72060	Mercury Milan 11-10	Front Left
72062	Ford Fusion 09-06; Lincoln Zephyr 2006; Mercury Milan 11-10	Front Right
72064	Ford Freestar 07-04; Mercury Monterey 07-04	Front Right
72097	Chevrolet Malibu 11-08; Pontiac G6 10-09	Front Right
72099	Chevrolet Malibu 11-08; Pontiac G6 10-09	Front Left
72101	Chrysler PT Cruiser 2003	Front Left
72102	Chrysler PT Cruiser 2003	Front Right
72105	Dodge Dakota 01-00, Durango 01-00	Front Right
	Dodge Dakota 01-00, Durango 01-00	Front Left
72153	Chrysler Town & Country 10-08; Dodge Grand Caravan 10-08	Front Left
72157	Chrysler Town & Country 10-08; Dodge Grand Caravan 10-08	Front Right
72159	Chrysler Town & Country 10-08; Dodge Grand Caravan 10-08; Volkswagen Routan 12-09	Front Left
72161	Chrysler Town & Country 10-08; Dodge Grand Caravan 10-08; Volkswagen Routan 10-09	Front Right
72163	Chrysler 300 10-06; Dodge Charger 10-06, Magnum 08-05	Rear Left
72165	Chrysler 300 10-06; Dodge Charger 10-06, Magnum 08-05	Rear Right
72175	Dodge Caliber 08-07; Jeep Compass 12-07, Patriot 12-07	Front Right

BUYER'S GUIDE

Part #	Applications	Position
72201	Chrysler 300M 04-99, Concorde 04-98, LHS 01-99; Dodge Intrepid 04-98	Front Left
72202	Chrysler 300M 04-99, Concorde 04-98, LHS 01-99; Dodge Intrepid 04-98	Front Right
72203	Chrysler Concorde 97-96, LHS 97-96, New Yorker 1996; Dodge Intrepid 97-96; Eagle Vision 97-96	Front Left
72204	Chrysler Concorde 97-96, LHS 97-96, New Yorker 1996; Dodge Intrepid 97-96; Eagle Vision 97-96	Front Right
72207	Chrysler Concorde 95-93, LHS 95-94, New Yorker 95-94; Dodge Intrepid 95-93; Eagle Vision 95-93	Front Left
72208	Chrysler Concorde 95-93, LHS 95-94, New Yorker 95-94; Dodge Intrepid 95-93; Eagle Vision 95-93	Front Right
72210	Chrysler Sebring 00-95; Dodge Avenger 00-95	Front Right
72212	Chrysler PT Cruiser 10-03; Dodge Neon 05-03	Front Right
72213	Dodge Monaco 92-90; Eagle Premier 92-88	Front Left
72214	Dodge Monaco 92-90; Eagle Premier 92-88	Front Right
72221	Dodge Caliber 11-07; Jeep Compass 12-07, Patriot 12-07	Front Left
72222	Jeep Compass 12-07, Patriot 12-07	Front Right
72224	Dodge Caliber 11-07	Front Right
72233	Chrysler Pacifica 08-07	Front Left
72235	Chrysler Pacifica 08-07	Front Left
	Chrysler Pacifica 08-07	Front Right
72240	Chrysler Pacifica 08-07	Front Left
	Chrysler Pacifica 08-07	Front Right
72242	Chrysler Town & Country 10-08; Dodge Grand Caravan 10-08; Volkswagen Routan 12-09	Front Right
72275	Chrysler Aspen 09-07; Dodge Durango 09-04	Front Right
	Chrysler Aspen 09-07; Dodge Durango 09-04	Front Left
72276	Dodge Dakota 10-05; Mitsubishi Raider 09-06	Front Left
	Dodge Dakota 10-05; Mitsubishi Raider 09-06	Front Right
72280	Chrysler 300 10-05; Dodge Challenger 2009, Charger 10-06, Magnum 08-05	Rear Left
72282	Chrysler 300 10-05; Dodge Challenger 2009, Charger 10-06, Magnum 08-05	Rear Right
72285	Dodge Dakota 03-01, Durango 03-01	Front Left
	Dodge Dakota 03-01, Durango 03-01	Front Right
72286	Dodge Ram 1500 05-02	Front Left
	Dodge Ram 1500 05-02	Front Right
72300	Chrysler Sebring 09-07; Dodge Avenger 13-08, Journey 10-09	Front Left
72304	Buick Enclave 09-08; Chevrolet Traverse 11-09; GMC Acadia 09-07; Saturn Outlook 10-07	Front Left
72306	Buick Enclave 09-08; Chevrolet Traverse 11-09; GMC Acadia 09-07; Saturn Outlook 10-07	Front Right
72308	Jeep Cherokee 87-84	Front Right
72339	Chevrolet Malibu 07-06; Pontiac G6 09-06	Front Left
72341	Chevrolet Malibu 07-06; Pontiac G6 09-06	Front Right
72354	Buick Allure 09-08, LaCrosse 09-08; Chevrolet Impala 09-06, Monte Carlo 07-06; Pontiac Grand Prix 08-05	Front Right
72360	Chrysler Pacifica 08-07	Front Right
72370	Dodge Ram 1500 10-06	Front Left
	Dodge Ram 1500 10-06	Front Right
72371	Chrysler Sebring 10-07; Dodge Avenger 13-08, Caliber 09-08	Front Right
72373	Chrysler Sebring 10-07; Dodge Avenger 10-08, Journey 10-09	Front Left
72374	Chrysler Sebring 09-07; Dodge Avenger 09-08, Journey 10-09	Front Right
72377	Chrysler Sebring 09-07; Dodge Avenger 09-08, Journey 13-09	Front Right
72381	Dodge Caliber 09-08	Front Left
72479	Dodge Nitro 11-07; Jeep Liberty 12-08	Front Right
72481	Dodge Nitro 11-07; Jeep Liberty 12-08	Front Left
72501	Chrysler Cirrus 00-98, Sebring 00-98; Dodge Stratus 00-98; Plymouth Breeze 1998	Front Left
72502	Chrysler Cirrus 00-98, Sebring 00-98; Dodge Stratus 06-98; Plymouth Breeze 1998	Front Right
72503	Chrysler Cirrus 97-95, Sebring 97-96; Dodge Stratus 97-95; Plymouth Breeze 97-96	Front Left
72504	Chrysler Cirrus 97-95, Sebring 97-96; Dodge Stratus 97-95; Plymouth Breeze 97-96	Front Right
72507	Chrysler Imperial 93-90, LeBaron 95-87, New Yorker 93-87; Dodge 600 88-87, Aries 89-87, Daytona 93-87, Dynasty 93-88, Lancer 89-87, Shadow 94-87, Spirit 95-89; Plymouth Acclaim 95-89, Caravelle 88-87, Reliant 89-87, Sundance 94-87	Front Left
	Chrysler Imperial 93-90, LeBaron 95-87, New Yorker 93-87; Dodge 600 88-87, Daytona 93-87, Dynasty 93-88, Lancer 89-87, Shadow 94-87, Spirit 91-89; Plymouth Acclaim 95-89, Caravelle 88-87, Sundance 94-87	Front Right
72508	Chrysler Imperial 93-90, LeBaron 95-87, New Yorker 93-87; Dodge 600 88-87, Aries 89-87, Daytona 93-87, Dynasty 93-88, Lancer 89-87, Shadow 94-87, Spirit 95-92; Plymouth Acclaim 95-89, Caravelle 88-87, Reliant 89-87, Sundance 94-87	Front Right
72509	Chrysler Sebring 06-01; Dodge Stratus 06-01	Front Left
72510	Chrysler Sebring 06-01	Front Right
72511	Chrysler Sebring 00-95; Dodge Avenger 00-95; Eagle Talon 98-95; Mitsubishi Eclipse 99-95	Front Left
72512	Chrysler Sebring 06-01	Front Right
72514	Chrysler Sebring 99-95; Dodge Avenger 99-95; Eagle Talon 98-95; Mitsubishi Eclipse 99-95	Front Right
72517	Chrysler PT Cruiser 10-01; Dodge Neon 05-00	Front Left
72518	Chrysler PT Cruiser 09-01; Dodge Neon 05-01	Front Right
72519	Chrysler PT Cruiser 09-04; Dodge Neon 05-03	Front Left
72520	Chrysler PT Cruiser 09-04; Dodge Neon 05-00	Front Right
72521	Chrysler Town & Country 07-96, Voyager 03-00; Dodge Caravan 07-91, Grand Caravan 07-91; Plymouth Voyager 00-96	Front Left
	Dodge Grand Caravan 04-97	Front Right
72522	Dodge Grand Caravan 04-97	Front Left
	Chrysler Town & Country 04-97	Front Right
72523	Chrysler Town & Country 95-90; Dodge Caravan 95-87, Grand Caravan 95-87; Plymouth Voyager 95-87	Front Left
	Chrysler Town & Country 95-90; Dodge Caravan 95-87, Grand Caravan 95-87; Plymouth Voyager 95-87	Front Right
72524	Chrysler Town & Country 95-92; Dodge Caravan 93-91, Grand Caravan 95-91; Plymouth Voyager 93-91	Front Right
72528	Chrysler Town & Country 07-96, Voyager 03-00; Dodge Caravan 07-96, Grand Caravan 07-96; Plymouth Voyager 00-96	Front Right
72529	Dodge Neon 99-98	Front Right
72530	Chrysler Town & Country 95-90; Dodge Caravan 95-87, Grand Caravan 95-87; Plymouth Voyager 95-87	Front Right
72532	Dodge Neon 01-00	Front Right
72533	Dodge Neon 99-98	Front Left
72534	Dodge Neon 99-98	Front Right
72537	Dodge Neon 97-95	Front Left
72538	Dodge Neon 97-95	Front Right
72540	Dodge Neon 97-95	Front Right
72571	Chrysler New Yorker 83-82; Dodge Aries 83-82, Charger 87-83, Omni 90-81, Rampage 84-82; Plymouth Horizon 90-81, Scamp 1983	Front Left
72572	Chrysler E Class 84-83, Executive Sedan 84-83, Laser 86-84, LeBaron 86-84, New Yorker 86-83; Dodge 400 1983, 600 86-83, Aries 86-84, Daytona 86-84, Lancer 86-85; Plymouth Caravelle 86-84, Reliant 86-84	Front Right
72573	Chrysler E Class 1984, LeBaron 83-82, New Yorker 83-82; Dodge 400 1983, Aries 83-82; Plymouth Reliant 83-82	Front Left

BUYER'S GUIDE

Part #	Applications	Position
72574	Chrysler E Class 1984, LeBaron 83-82, New Yorker 83-82; Dodge 400 1983, Aries 83-82, Charger 87-83, Omni 90-81, Rampage 84-82; Plymouth Horizon 90-81, Reliant 83-82, Scamp 1983	Front Right
72575	Chrysler E Class 84-83, Executive Sedan 84-83, Laser 86-84, LeBaron 86-84, New Yorker 86-83; Dodge 400 1983, 600 86-83, Aries 86-84, Daytona 86-84, Lancer 86-85; Plymouth Caravelle 86-84, Reliant 86-84	Front Left
	Chrysler Laser 86-84, LeBaron 86-84, New Yorker 86-84; Dodge 400 1983, 600 86-83, Daytona 86-84, Lancer 86-85; Plymouth Caravelle 86-84	Front Right
72577	Chrysler Pacifica 06-04	Front Left
72578	Chrysler Pacifica 06-04	Front Right
72580	Chrysler Pacifica 06-04	Front Right
72581	Dodge Caravan 86-84; Plymouth Voyager 86-84	Front Left
72582	Dodge Caravan 86-84; Plymouth Voyager 86-84	Front Right
72583	Daihatsu Charade 92-88	Front Left
72584	Daihatsu Charade 92-88	Front Right
72587	Dodge Charger 1987, Omni 90-87; Plymouth Horizon 90-87	Front Left
72588	Dodge Charger 1987, Omni 90-87; Plymouth Horizon 90-87	Front Right
72805	Dodge Dakota 96-91	Front Right
	Dodge Dakota 96-91	Front Left
72875	Dodge Dakota 99-97, Durango 99-98	Front Left
	Dodge Dakota 99-97, Durango 99-98	Front Right
72876	Dodge Dakota 90-87	Front Left
	Dodge Dakota 90-87	Front Right
72979	Volkswagen Beetle 04-98, Golf 01-99, Jetta 05-99	Front Left
73204	Chevrolet Metro 01-98; Geo Metro 97-95; Suzuki Swift 01-95	Front Right
73501	Chevrolet Metro 01-98; Geo Metro 97-95; Suzuki Swift 01-95	Front Left
73502	Chevrolet Metro 01-98; Geo Metro 97-95; Suzuki Swift 01-95	Front Right
73503	Chevrolet Metro 01-98; Geo Metro 97-95; Suzuki Swift 01-95	Front Left
73507	Chevrolet Metro 00-98; Geo Metro 97-95	Front Left
73508	Chevrolet Metro 00-98; Geo Metro 97-95	Front Right
73571	Geo Metro 94-89	Front Left
73572	Geo Metro 94-89	Front Right
73573	Geo Metro 94-89	Front Left
73574	Geo Metro 94-89	Front Right
73577	Geo Storm 93-90; Isuzu Stylus 93-91	Front Left
73578	Geo Storm 93-90; Isuzu Stylus 93-91	Front Right
73579	Geo Storm 93-90; Isuzu Stylus 93-91	Front Left
74011	Jeep Cherokee 01-99, Grand Cherokee 04-99	Front Left
74012	Jeep Cherokee 01-99, Grand Cherokee 04-99	Front Right
74013	Jeep Cherokee 01-99, Grand Cherokee 04-99	Front Left
74014	Jeep Cherokee 01-99, Grand Cherokee 04-99	Front Right
74017	Jeep Cherokee 98-84, Comanche 87-86, Grand Cherokee 98-93, Wagoneer 87-84	Front Left
74018	Jeep Cherokee 98-84, Comanche 87-86, Grand Cherokee 98-93, Wagoneer 87-84	Front Right
74272	Jeep Liberty 07-02	Front Right
74278	Jeep Liberty 06-02	Front Right
74372	Jeep Commander 10-06, Grand Cherokee 10-05	Front Right
74571	Jeep Liberty 07-02	Front Left
74671	Jeep Commander 10-06, Grand Cherokee 10-05	Front Left
74673	Jeep Commander 10-06, Grand Cherokee 10-05	Front Left
74677	Jeep Liberty 06-02	Front Left
74975	AM General Hummer 01-92	Rear Left
	AM General Hummer 01-92	Rear Right
74976	American Motors Eagle 88-80	Front Left
	American Motors Eagle 88-80	Front Right
75103	Volkswagen Beetle 04-02	Front Right
75104	Audi A3 13-06; Volkswagen CC 13-10, Eos 13-07, Golf 2006, GTI 13-06, Jetta 10-06, Passat 09-06, Passat CC 10-09	Front Right
75105	Volkswagen Transporter 79-66	Rear Left
	Volkswagen Transporter 79-66	Rear Right
75107	Volkswagen Golf 2003, Jetta 05-04	Front Right
75111	Volkswagen Phaeton 06-04	Front Left
75112	Volkswagen Phaeton 06-04	Front Right
75113	Volkswagen Phaeton 06-04	Front Left
75114	Volkswagen Phaeton 06-04	Front Right
75194	Volkswagen Beetle 10-06	Front Left
75301	Volkswagen Jetta 14-12	Front Left
75302	Porsche Boxster 04-00	Rear Left
	Porsche Boxster 04-00	Rear Right
75309	Volkswagen CC 13-09, Passat 09-06, Tiguan 14-09	Front Left
75310	Volkswagen CC 10-09, Passat 08-06, Tiguan 13-09	Front Right
75321	Volkswagen CC 13-09, Passat 09-06, Tiguan 14-09	Front Right
75356	Volkswagen Jetta 14-12	Front Right
75370	Volkswagen Jetta 10-05, Rabbit 09-06	Front Left
75372	Volkswagen CC 2009, Passat CC 2009	Front Left
75547	Volkswagen Touareg 08-04	Front Left
	Volkswagen Touareg 08-04	Front Right
75552	Volkswagen Golf 13-10, Jetta 13-11	Front Right
75554	Volkswagen Jetta 13-11	Front Left
75556	Volkswagen Jetta 13-11	Front Right
75578	Volkswagen Beetle 10-03	Front Right
75771	Volkswagen Beetle 05-03	Front Left
75772	Volkswagen Beetle 2005	Front Right
75773	Volkswagen Jetta 10-05, Passat 10-06, Rabbit 09-06	Front Left
75774	Volkswagen CC 2009, Jetta 10-05, Passat 10-06, Passat CC 2009, Rabbit 09-06	Front Right
75805	Audi Fox 79-73; Volkswagen Dasher 81-74, Fox 93-87	Front Left
	Audi Fox 79-73; Volkswagen Dasher 81-74, Fox 93-87	Front Right
75871	Volkswagen Beetle 06-05	Front Left
75872	Volkswagen Beetle 06-05	Front Right
75873	Volkswagen Beetle 05-99, Jetta 07-99	Front Left
75875	Volkswagen EuroVan 1992, Transporter 92-85, Vanagon 91-83	Front Left
	Volkswagen EuroVan 1992, Transporter 92-85, Vanagon 91-83	Front Right
75877	Volkswagen Beetle 1998	Front Left
75878	Volkswagen Beetle 1998	Front Right
75879	Volkswagen Cabrio 02-99, Golf 99-93, Jetta 99-93, Passat 97-95	Front Left
75880	Volkswagen Cabrio 02-99, Golf 99-93, Jetta 99-93, Passat 97-95	Front Right
75881	Volkswagen Golf 06-03, Jetta 05-02	Front Left
75882	Volkswagen Golf 06-03, Jetta 05-02	Front Right
75883	Volkswagen Golf 13-10, Jetta 10-05	Front Left
75884	Volkswagen Jetta 06-05	Front Right
75900	Volkswagen Beetle 79-66	Rear Left
	Volkswagen Beetle 79-66	Rear Right
75905	Volkswagen EuroVan 00-92	Front Left
75906	Volkswagen EuroVan 00-92	Front Left
	Volkswagen EuroVan 00-92	Front Right
75970	Volkswagen Beetle 05-98, Golf 03-99, Jetta 04-99	Front Left
75971	Audi TT Quattro 06-02; Volkswagen Golf 2003, Jetta 05-04	Front Left

BUYER'S GUIDE

Part #	Applications	Position
75972	Audi A3 13-06, A3 Quattro 13-07; Volkswagen Beetle 2006, CC 13-10, Eos 13-07, Golf 06-04, GTI 13-06, Jetta 10-04, Passat 09-06, Passat CC 10-09	Front Left
75973	Audi TT 02-00; Volkswagen Beetle 04-98, Golf 06-99, Golf City 09-08, Jetta 05-99	Front Left
75974	Audi TT 02-00; Volkswagen Beetle 05-98, Golf 06-99, Golf City 09-08, Jetta 05-99	Front Right
75977	Volkswagen Beetle 09-06, Corrado 95-92, Golf 06-95, Golf City 09-08, Jetta 05-94, Passat 97-93	Front Left
75978	Volkswagen Beetle 09-98, Golf 06-99, Golf City 09-08, Jetta 05-99	Front Right
75980	Volkswagen Corrado 95-92, Golf 99-95, Jetta 99-94, Passat 97-93	Front Right
75981	Volkswagen Cabrio 02-99, Golf 99-93, Jetta 99-93, Passat 97-90	Front Left
75982	Volkswagen Cabrio 02-99, Golf 99-93, Jetta 99-93, Passat 97-90	Front Right
75983	Volkswagen Cabriolet 93-85, Golf 92-85, Jetta 92-85, Scirocco 88-86	Front Left
	Volkswagen Corrado 92-90	Front Right
75984	Volkswagen Cabriolet 93-85, Scirocco 88-86	Front Right
75987	Volkswagen Corrado 92-90	Front Left
	Volkswagen Golf 92-85, Jetta 92-85	Front Right
75988	Volkswagen Golf 92-85, Jetta 92-85	Front Right
75989	Volkswagen Golf 92-85, Jetta 92-85, Scirocco 89-85	Front Left
75990	Audi A3 Quattro 13-07; Volkswagen Jetta 10-05, Rabbit 09-06	Front Right
75991	Volkswagen Jetta 84-80, Rabbit 84-75, Scirocco 84-75	Front Left
75992	Volkswagen Jetta 84-80, Rabbit 84-75, Scirocco 89-75	Front Right
75999	Volkswagen EuroVan 1992, Transporter 92-86, Vanagon 91-86	Rear Left
	Volkswagen EuroVan 1992, Transporter 92-86, Vanagon 91-86	Rear Right
76078	Mercedes-Benz E320 03-00, E430 02-00	Front Left
76080	Mercedes-Benz 200 68-66, 220 73-68, 220D 73-68, 230 78-74, 240D 83-74, 250 72-68, 250C 72-69, 280C 76-73, 280CE 81-78, 280E 81-78, 280SE 80-78, 300CD 85-78, 300D 85-77, 300TD 85-79, 380SE 85-84, 380SEC 83-82, 380SL 85-81, 380SLC 1981, 45	Rear Left
	Mercedes-Benz 200 68-66, 220 73-68, 220D 73-68, 230 78-74, 240D 83-74, 250 72-68, 250C 72-69, 280C 76-73, 280CE 81-78, 280E 81-78, 280SE 80-78, 300CD 85-78, 300D 85-77, 300TD 85-79, 380SE 85-84, 380SEC 83-82, 380SL 85-81, 380SLC 1981, 45	Rear Right
76090	Mercedes-Benz ML320 03-98, ML350 05-03, ML430 01-99, ML500 05-02, ML55 AMG 03-00	Rear Left
	Mercedes-Benz ML320 03-98, ML350 05-03, ML430 01-99, ML500 05-02, ML55 AMG 03-00	Rear Right
76524	Mercedes-Benz C240 05-03, C280 07-06, C320 05-03, C350 07-06	Front Right
76526	Mercedes-Benz C240 05-03, C280 07-06, C320 05-03, C350 07-06	Front Left
76774	Mercedes-Benz GL350 14-10, GL450 12-07, ML320 09-07, ML350 11-06, ML450 11-10, ML500 07-06, ML550 11-08	Front Left
76776	Mercedes-Benz GL350 14-10, GL450 12-07, ML320 09-07, ML350 11-06, ML450 11-10, ML500 07-06, ML550 11-08	Front Right
76792	Mercedes-Benz E320 03-00, E430 02-00	Front Right
76793	Mercedes-Benz E320 00-98	Front Right
76794	Mercedes-Benz E320 00-98	Front Left
76795	Mercedes-Benz ML320 03-98, ML350 05-03, ML430 01-00, ML500 05-02, ML55 AMG 03-00	Front Left
76796	Mercedes-Benz ML320 03-98, ML350 05-03, ML430 01-00, ML500 05-02, ML55 AMG 03-00	Front Right
77008	Audi 90 Quattro 95-90, Coupe Quattro 91-90	Front Right
77057	Audi S6 10-07	Front Left
77059	Audi S6 10-07	Front Right
77103	Audi A6 Quattro 04-00, Allroad Quattro 05-03, RS6 04-03, S6 03-02	Front Left
77104	Audi A6 Quattro 04-00, A8 Quattro 04-00, Allroad Quattro 05-03, RS6 04-03, S6 03-02	Front Right
77107	Audi A8 Quattro 04-00, Allroad Quattro 05-01	Front Left
77108	Audi Allroad Quattro 05-01	Front Right
77111	Audi Allroad Quattro 05-01	Front Left
77112	Audi Allroad Quattro 05-01	Front Right
77113	Audi TT Quattro 2004	Front Left
77114	Audi TT Quattro 2004	Front Right
77117	Audi TT 06-03	Front Left
77118	Audi TT 06-03	Front Right
77125	Audi A6 04-02	Front Left
	Audi A6 04-02	Front Right
77153	Audi A6 Quattro 10-05	Front Left
77155	Audi A6 Quattro 10-05	Front Right
77163	Audi A4 01-97, S4 02-00	Front Left
77246	Audi A4 Quattro 2002	Front Right
77248	Audi A4 Quattro 2002	Front Left
77261	Audi A6 10-06	Front Right
77263	Audi A6 10-06	Front Left
77281	Audi 90 95-93, Cabriolet 98-94	Front Left
77283	Audi 90 95-93, Cabriolet 98-94	Front Right
77285	Buick Riviera 88-86	Front Left
77313	Audi A6 Quattro 2001	Front Right
77331	Audi A8 Quattro 09-05, S8 09-07	Front Left
77333	Audi A8 Quattro 09-05, S8 09-07	Front Right
77347	Audi A8 Quattro 09-07	Front Right
77500	Audi A4 Quattro 09-02, S4 09-04	Rear Left
	Audi A4 Quattro 09-02, S4 09-04	Rear Right
77519	Audi A6 Quattro 04-00, RS6 04-03, S6 03-02	Rear Left
	Audi A6 Quattro 04-00, RS6 04-03, S6 03-02	Rear Right
77521	Audi A6 Quattro 04-00	Rear Right
	Audi A6 Quattro 04-02	Rear Left
77523	Audi A4 01-97, S4 02-00	Front Right
77525	Audi A6 Quattro 2002	Front Right
77547	Audi A4 13-09, A4 Quattro 12-09, A5 Quattro 12-08, S4 13-10, S5 09-08	Front Right
	Audi A4 13-09, A4 Quattro 12-09, A5 Quattro 12-08, S4 13-10, S5 09-08	Front Left
77801	Audi 100 91-89	Front Left
77802	Audi 100 91-89	Front Right
77803	Audi 5000 88-80	Front Left
77804	Audi 5000 88-80	Front Right
77805	Audi A4 Quattro 01-96, S4 02-00	Rear Right
	Audi A4 Quattro 01-96, S4 02-00	Rear Left
77807	Audi A4 Quattro 01-97	Front Left
77808	Audi A4 Quattro 01-97	Front Right
77809	Audi A4 Quattro 01-96	Front Left
77810	Audi A4 Quattro 01-96	Front Right
77811	Audi A4 01-97; Volkswagen Passat 00-98	Front Left
77812	Audi A4 01-97; Volkswagen Passat 00-98	Front Right
77813	Volkswagen Passat 01-00	Front Left
77814	Volkswagen Passat 01-00	Front Right
77901	Audi A4 Quattro 09-06	Front Left
77902	Audi A4 Quattro 09-06	Front Right
77903	Audi A4 Quattro 09-05, S4 09-04	Front Left

BUYER'S GUIDE

Part #	Applications	Position
77904	Audi A4 Quattro 09-02, S4 09-04	Front Right
77907	Audi A4 Quattro 08-02	Front Left
77908	Audi A4 Quattro 08-02	Front Right
77909	Audi A4 08-02	Front Right
	Audi A4 08-02, A4 Quattro 04-02	Front Left
77911	Audi A4 04-02, A4 Quattro 04-03	Front Left
77912	Audi A4 04-02, A4 Quattro 04-03	Front Right
77913	Audi A4 01-97, A4 Quattro 01-97; Volkswagen Passat 00-98	Front Left
77914	Audi A4 01-97, A4 Quattro 01-97; Volkswagen Passat 00-98	Front Right
77917	Audi A4 Quattro 01-96; Volkswagen Passat 05-99	Front Left
77918	Audi A4 Quattro 01-96; Volkswagen Passat 05-99	Front Right
77919	Audi A4 08-02, RS4 08-07, S4 09-04	Front Left
77920	Audi A4 08-02, RS4 08-07, S4 09-04	Front Right
77921	Audi A4 01-96, S4 02-00; Volkswagen Passat 05-98	Front Left
77922	Audi A4 01-96, S4 02-00; Volkswagen Passat 05-98	Front Right
77923	Audi A4 01-96, A4 Quattro 2002; Volkswagen Passat 05-98	Front Left
77924	Audi A4 01-96, A4 Quattro 2002; Volkswagen Passat 05-98	Front Right
	Audi A6 Quattro 2001	Front Left
77927	Audi A6 01-99, A6 Quattro 04-98	Front Left
77928	Audi A6 01-99, A6 Quattro 04-98, A8 99-97, A8 Quattro 03-97, S8 03-01	Front Right
77929	Audi 100 94-92, 100 Quattro 94-92, A6 98-95, A6 Quattro 98-95	Front Left
77930	Audi 100 94-92, 100 Quattro 94-92, A6 98-95, A6 Quattro 98-95	Front Right
77931	Audi A8 99-97, A8 Quattro 03-97, S8 03-01	Front Left
77972	Audi TT Quattro 06-02	Front Right
77973	Audi TT Quattro 03-00; Volkswagen Beetle 05-02	Front Left
77974	Audi TT Quattro 03-00; Volkswagen Golf 2002	Front Right
78084	BMW X5 12-07, X6 12-08	Front Left
78086	BMW X5 12-07, X6 12-08	Front Right
78096	Mini Cooper 07-05	Front Left
78098	Mini Cooper 07-05	Front Right
78100	Mini Cooper 2007	Front Left
78102	BMW 325Ci 05-01, 325i 05-96, 330Ci 05-01, 330xi 05-01	Rear Right
78103	BMW 325xi 2006, 328i xDrive 12-09, 328xi 08-07, 330xi 2006, 335xi 08-07	Front Left
78104	BMW 325xi 2006, 328i xDrive 12-09, 328xi 08-07, 330xi 2006, 335xi 08-07	Front Right
78106	BMW 525i 03-01, 528i 00-97, 530i 03-01	Rear Left
	BMW 525i 03-01, 528i 00-97, 530i 03-01	Rear Right
78107	BMW 325xi 2006, 330xi 2006	Rear Left
	BMW 330i 2006	Front Left
78108	BMW 325xi 2006, 330i 2006, 330xi 2006, 525i 06-04, 525xi 2006, 530i 06-04, 530xi 2006	Rear Left
	BMW 325xi 2006, 330i 2006, 330xi 2006, 525i 06-04, 525xi 2006, 530i 06-04, 530xi 2006	Rear Right
78111	BMW 325xi 05-01, 330xi 05-01	Front Left
78112	BMW 325xi 05-01, 330xi 05-01	Front Right
78113	BMW 330i 05-01	Rear Left
78114	BMW 330i 05-01	Rear Right
78115	BMW 540i 03-97	Rear Right
	BMW 540i 03-97	Rear Left
78117	BMW 525xi 07-06, 528i xDrive 10-09, 528xi 2008, 530xi 07-06, 535i xDrive 10-09, 535xi 2008	Front Left
78118	BMW 525xi 07-06, 528i xDrive 10-09, 528xi 2008, 530xi 07-06, 535i xDrive 10-09, 535xi 2008	Front Right
78121	BMW X3 08-04	Front Left
78122	BMW X3 08-04	Front Right
78199	Mini Cooper 08-02	Front Left
78200	Mini Cooper 08-02	Front Right
78202	Mini Cooper 04-02	Front Right
78203	Mini Cooper 07-02	Front Left
78204	Mini Cooper 07-02	Front Right
78311	Mini Cooper 08-05	Front Left
78330	Mini Cooper 13-08	Front Left
78332	Mini Cooper 13-08	Front Right
78467	Mini Cooper 04-02	Front Left
78571	BMW X5 06-00	Front Left
78572	BMW X5 06-00	Front Right
78580	BMW 325xi 05-01, 330xi 05-01	Rear Left
78901	BMW 325is 95-92, 328i 98-96, 328is 98-96, Z3 00-99	Rear Right
	BMW 128i 12-08, 323Ci 2000, 323i 00-98, 323is 99-98, 325Ci 06-01, 325i 06-01, 325is 95-92, 325xi 05-01, 328Ci 2000, 328i 12-96, 328is 99-96, 330Ci 05-01, 330i 05-01, 330xi 05-01, Z3 00-99, Z4 06-03	Rear Left
78902	BMW 128i 12-08, 323Ci 2000, 323i 00-98, 323is 99-98, 325Ci 06-01, 325i 06-01, 325xi 05-01, 328Ci 2000, 328i 12-99, 328is 1999, 330Ci 05-01, 330i 05-01, 330xi 05-01, Z4 06-03	Rear Right
78903	BMW M3 06-01, Z4 2006	Rear Left
78904	BMW M3 06-01, Z4 2006	Rear Right
78905	BMW 318i 98-92	Rear Left
	BMW 318i 98-92	Rear Right
78906	BMW 318i 92-84, 325 88-86, 325Ci 05-01, 325e 87-84, 325es 87-86, 325i 05-87, 325is 93-87, 325iX 91-88, 330Ci 05-01, 330xi 05-01, M3 91-88	Rear Left
	BMW 318i 92-84, 325 88-86, 325e 87-84, 325es 87-86, 325i 93-87, 325is 93-87, 325iX 91-88, M3 91-88	Rear Right
78915	BMW M3 99-95	Rear Left
	BMW M3 99-95	Rear Right
78975	BMW 540i 03-97, M5 03-00	Rear Left
	BMW 540i 03-97, M5 03-00	Rear Right
79031	Volvo S40 08-05, V50 07-05	Front Left
79033	Volvo C30 12-08, C70 12-08, S40 11-04, V50 11-05	Front Right
79041	Volvo C70 02-01, XC70 07-03	Front Right
79074	Nissan Quest 09-04	Front Left
79079	Volvo S40 2000, V40 2000	Front Left
79081	Volvo S40 2000, V40 2000	Front Right
79083	Volvo C70 04-00	Front Right
79084	Volvo C70 04-01	Front Left
79085	Volvo C70 02-01, XC70 07-03	Front Left
79249	Volvo C30 12-08, C70 12-08, S40 11-04, V50 11-05	Front Left
79269	Volvo C70 04-00	Front Left
79342	Volvo S80 13-07	Front Left
79343	Volvo S80 10-07	Front Right
79564	Volvo XC90 12-08	Front Left
79566	Volvo S40 08-05, V50 07-05	Front Right
79569	Volvo XC90 12-08	Front Right
79571	Volvo XC90 12-08	Front Right
79711	Volvo S40 04-01, V40 2004	Front Left
79712	Volvo S40 04-01, V40 2004	Front Right
79713	Volvo S60 09-01, S80 06-04, V70 07-01	Front Left
79714	Volvo S60 09-02, S80 06-04, V70 07-02	Front Right
79717	Volvo S60 05-02, V70 07-01	Front Left
79718	Volvo S60 09-01, V70 07-01	Front Right
79721	Volvo S60 07-02, V70 07-01, XC70 07-03	Front Left
79722	Volvo S60 07-01, V70 07-01	Front Right
79723	Volvo C70 00-99, S70 00-99, V70 00-99	Front Left

BUYER'S GUIDE

Part #	Applications	Position
79724	Volvo C70 00-99, S70 00-99, V70 00-99	Front Right
79727	Volvo S60 04-02, S70 00-99, V70 00-99	Front Left
79728	Volvo S70 00-99, V70 07-99	Front Right
79729	Volvo S70 00-99, V70 00-99	Front Right
79730	Volvo V70 2001, XC70 07-03	Front Right
79731	Volvo 850 97-93, S70 1998, V70 1998	Front Left
79732	Volvo V70 1998	Front Right
79734	Volvo 850 97-93, S70 1998, V70 1998	Front Right
79737	Volvo S80 05-99	Front Left
79738	Volvo S80 05-99	Front Right
79740	Volvo S80 05-99	Front Right
80051	Saab 900 93-90	Front Left
80052	Saab 900 93-90	Front Right
80060	Saab 9-5 01-99	Front Left
	Saab 9-5 01-99	Front Right
80068	Saab 9-5 09-03	Front Left
	Saab 9-5 09-03	Front Right
80082	Saab 9-3 11-03, 9-3X 11-10	Front Right
	Saab 9-3 11-03, 9-3X 11-10	Front Left
80180	Saab 9000 93-92	Front Left
	Saab 9000 93-92	Front Right
80311	Saab 900 98-94, 9-3 02-99	Front Right
	Saab 900 98-94	Front Left
80313	Saab 900 97-94	Front Right
80315	Saab 9000 98-91	Front Right
	Saab 9000 98-91	Front Left
80369	Saab 9-3 02-99	Front Left
85103	Fiat 500 13-12	Front Left
85105	Fiat 500 13-12	Front Right
86201	Daewoo Lanos 02-99	Front Left
86202	Daewoo Lanos 02-99	Front Right
86205	Daewoo Nubira 02-99	Front Left
	Daewoo Nubira 02-99	Front Right
86502	Daewoo Lanos 02-99	Front Right
86503	Daewoo Leganza 02-99	Front Left
86504	Daewoo Leganza 02-99	Front Right
86507	Daewoo Nubira 02-99	Front Left
86508	Daewoo Nubira 02-99	Front Right
87101	Hyundai Entourage 09-07; Kia Sedona 12-06	Front Left
87102	Hyundai Entourage 09-07; Kia Sedona 12-06	Front Right
87103	Kia Rio 2006	Front Left
87104	Kia Rio 2006	Front Right
87106	Kia Sorento 2014	Front Right
87107	Kia Rio 2006	Front Left
87108	Kia Rio 2006	Front Right
87110	Kia Amanti 06-04	Front Right
87187	Kia Spectra 06-05, Spectra5 07-05	Front Right
87202	Hyundai Sonata 05-99; Kia Magentis 05-01, Optima 06-01	Front Right
87273	Kia Sorento 09-03	Front Left
87275	Kia Sorento 09-03	Front Right
87302	Kia Sephia 97-95; Mazda Protege 98-95	Front Right
87372	Kia Sephia 97-95	Front Right
87501	Hyundai Sonata 05-99; Kia Magentis 05-01, Optima 06-01	Front Left
87503	Kia Spectra 06-04, Spectra5 06-05	Front Left
87504	Kia Spectra 06-05, Spectra5 06-05	Front Right
87507	Kia Spectra 06-05, Spectra5 07-05	Front Left
87511	Kia Spectra 09-06, Spectra5 09-06	Front Left
87512	Kia Spectra 09-06, Spectra5 09-06	Front Right
87601	Kia Amanti 06-04	Front Left
87603	Kia Rio 05-01	Front Left
87604	Kia Rio 05-01	Front Right
87607	Kia Rio 05-01	Front Left
87608	Kia Rio 05-01	Front Right
87609	Kia Sephia 2001, Spectra 04-01	Front Left
87611	Kia Sephia 2001, Spectra 04-01	Front Left
87612	Kia Sephia 2001, Spectra 04-01	Front Right
87613	Kia Sephia 00-98, Spectra 2000	Front Left
87614	Kia Sephia 00-98, Spectra 2000	Front Right
87615	Kia Sephia 00-95, Spectra 2000	Front Left
87617	Kia Sedona 05-02	Front Left
87618	Kia Sedona 05-02	Front Right
87682	Kia Sephia 95-94	Front Right
87683	Kia Sportage 02-01	Front Left
87684	Kia Sportage 02-01	Front Right
87687	Kia Sportage 00-95	Front Left
87688	Kia Sportage 00-95	Front Right
88012	Hyundai Santa Fe 09-07, Veracruz 12-07	Front Right
88098	Hyundai Tucson 09-05; Kia Sportage 10-05	Rear Left
	Hyundai Tucson 09-05; Kia Sportage 10-05	Rear Right
88104	Hyundai Accent 05-00	Front Right
88107	Hyundai Santa Fe 06-01	Front Left
88108	Hyundai Santa Fe 06-01	Front Right
88109	Hyundai Santa Fe 06-01	Front Left
88114	Hyundai Santa Fe 04-01	Front Right
88117	Hyundai Santa Fe 09-01	Front Left
88118	Hyundai Santa Fe 09-01	Front Right
88201	Hyundai Sonata 93-92	Front Left
88204	Hyundai XG300 2001, XG350 05-02	Front Right
88208	Hyundai Santa Fe 06-03	Front Right
88219	Hyundai Sonata 98-94	Front Left
88257	Hyundai Tiburon 08-03	Front Right
88259	Hyundai Sonata 08-06	Front Right
88261	Hyundai Tiburon 08-03	Front Left
88271	Hyundai Sonata 91-90	Front Left
88295	Hyundai Santa Fe 09-07	Front Left
88322	Hyundai Santa Fe 06-01	Front Right
88348	Hyundai Accent 11-06; Kia Rio 11-06, Rio5 11-06	Front Left
88415	Hyundai Elantra 12-07	Front Left
88417	Hyundai Elantra 10-07	Front Right
88420	Hyundai Santa Fe 12-10; Kia Sorento 13-11	Front Left
88422	Hyundai Santa Fe 12-10; Kia Sorento 13-11	Front Right
88427	Hyundai Elantra 12-09	Front Right
88432	Hyundai Accent 11-06; Kia Rio 11-07, Rio5 11-06	Front Left
88434	Hyundai Accent 11-06; Kia Rio 11-07, Rio5 11-06	Front Right
88438	Hyundai Accent 11-06; Kia Rio 11-06, Rio5 11-06	Front Right
88456	Hyundai Veracruz 12-07	Front Left
88501	Hyundai Accent 05-00	Front Left
88502	Hyundai Accent 05-00	Front Right
88503	Hyundai Accent 05-00	Front Left
88504	Hyundai Accent 99-95	Front Right
88507	Hyundai Accent 99-95	Front Left
88509	Hyundai Elantra 06-01, Tiburon 08-03	Front Left
88510	Hyundai Elantra 06-01, Tiburon 08-03	Front Right
88511	Hyundai Elantra 06-01, Tiburon 08-03	Front Left
88512	Hyundai Elantra 06-01, Tiburon 08-03; Kia Spectra 2004	Front Right
88513	Hyundai Sonata 05-99; Kia Magentis 05-01, Optima 06-01	Front Left

BUYER'S GUIDE

Part #	Applications	Position
88514	Hyundai Sonata 05-99; Kia Magentis 05-01, Optima 06-01	Front Right
88517	Hyundai Sonata 98-94	Front Left
88518	Hyundai Sonata 98-94	Front Right
88519	Hyundai Sonata 98-94	Front Left
88520	Hyundai Sonata 98-94	Front Right
88522	Hyundai Sonata 93-92	Front Right
88523	Hyundai XG300 2001, XG350 05-02	Front Left
88527	Hyundai Santa Fe 06-03	Front Left
88528	Hyundai Santa Fe 06-03	Front Right
88533	Hyundai Elantra 98-96, Tiburon 99-97	Front Left
88534	Hyundai Elantra 98-96, Tiburon 99-97	Front Right
88536	Hyundai Tiburon 08-03	Front Left
88561	Hyundai Santa Fe 09-07	Front Left
88571	Hyundai Elantra 95-92, Sonata 91-89; Mitsubishi Mirage 92-91	Front Left
88572	Hyundai Scoupe 95-93	Front Left
	Eagle Summit 90-89; Mitsubishi Galant 87-85, Mirage 92-89; Plymouth Colt 90-89	Front Right
88574	Hyundai Elantra 95-92, Sonata 91-89; Mitsubishi Cordia 88-84, Tredia 88-84	Front Right
88578	Hyundai Scoupe 95-93	Front Right
88581	Hyundai Sonata 93-92	Front Left
88631	Hyundai Sonata 13-11	Front Right
88633	Hyundai Sonata 13-11	Front Left
88635	Hyundai Sonata 13-11	Front Right
88637	Hyundai Sonata 13-11	Front Left
89059	Mitsubishi Galant 09-04	Front Left
89061	Mitsubishi Galant 09-04	Front Right
89101	Dodge Raider 89-87, Ram 50 93-83; Mitsubishi Mighty Max 91-83, Montero 91-83	Front Left
89102	Dodge Raider 89-87, Ram 50 93-83; Mitsubishi Mighty Max 94-83, Montero 91-83	Front Right
89103	Hyundai Tucson 09-05; Kia Rondo 11-08, Sportage 10-05	Front Left
89104	Hyundai Tucson 09-05	Front Right
89107	Mitsubishi Mighty Max 94-91	Front Left
89108	Hyundai Tucson 07-05	Front Right
89110	Hyundai Tucson 09-05; Kia Rondo 11-08, Sportage 10-05	Front Right
89111	Hyundai Tucson 09-05	Front Left
89112	Hyundai Tucson 09-05; Kia Sportage 10-05	Front Right
89113	Mitsubishi Diamante 04-97	Front Left
89114	Mitsubishi Diamante 04-97	Front Right
89117	Mitsubishi Lancer 07-02	Front Left
89118	Mitsubishi Lancer 07-02	Front Right
89119	Mitsubishi Lancer 06-04	Front Left
89120	Mitsubishi Lancer 06-04	Front Right
89121	Mitsubishi Outlander 06-03	Front Left
89122	Mitsubishi Outlander 06-03	Front Right
89123	Mitsubishi Outlander 06-03	Rear Left
89124	Mitsubishi Outlander 06-03	Rear Right
89127	Mitsubishi Outlander 06-03	Front Left
89128	Mitsubishi Outlander 06-03	Front Right
89131	Mitsubishi Montero 06-01	Front Left
89133	Mitsubishi Montero 06-01	Front Right
89201	Dodge Stealth 96-91	Front Left
89203	Dodge Stealth 96-91; Mitsubishi 3000GT 99-91, Diamante 96-92	Front Left
89204	Dodge Stealth 96-93; Mitsubishi 3000GT 99-93	Front Right
89207	Eagle Talon 98-90; Mitsubishi Eclipse 99-90, Galant 92-90; Plymouth Laser 94-92	Front Left
89208	Chrysler Sebring 05-01; Dodge Stratus 05-01; Mitsubishi Eclipse 05-00, Galant 03-99	Front Right
89273	Mitsubishi Diamante 95-93	Front Left
89301	Mitsubishi Lancer 06-03	Front Left
89302	Mitsubishi Lancer 06-03	Front Right
89352	Mitsubishi Eclipse 11-06, Galant 11-10	Front Left
89365	Mitsubishi Eclipse 08-06	Front Right
89501	Eagle Summit 96-93; Plymouth Colt 94-93	Front Left
89502	Eagle Summit 96-93; Mitsubishi Mirage 96-93; Plymouth Colt 94-93	Front Right
89504	Dodge Stealth 96-91; Mitsubishi 3000GT 99-92, Diamante 96-93	Front Right
89508	Dodge Stealth 92-91; Mitsubishi 3000GT 92-91, Diamante 1992	Front Right
89509	Chrysler Sebring 05-01; Dodge Stratus 05-01; Mitsubishi Eclipse 05-00, Galant 03-99	Front Left
89510	Dodge Stealth 92-91; Mitsubishi 3000GT 92-91	Front Right
89511	Chrysler Sebring 05-01; Dodge Stratus 05-01; Mitsubishi Eclipse 05-00, Galant 03-99	Front Left
89512	Chrysler Sebring 05-01; Dodge Stratus 05-01; Mitsubishi Eclipse 05-00, Galant 03-99	Front Right
89514	Eagle Talon 98-95; Mitsubishi Eclipse 99-95	Front Right
89518	Eagle Talon 98-95; Mitsubishi Eclipse 99-95	Front Right
89519	Eagle Talon 98-95; Mitsubishi Eclipse 99-95	Front Left
89520	Eagle Talon 98-95; Mitsubishi Eclipse 99-95	Front Right
89521	Eagle Talon 98-95; Mitsubishi Eclipse 99-95	Front Left
89522	Eagle Talon 98-95; Mitsubishi Eclipse 99-95	Front Right
89527	Hyundai Elantra 00-99, Tiburon 01-00; Kia Spectra 09-04	Front Left
89528	Hyundai Elantra 00-99, Tiburon 01-00; Kia Spectra 09-04	Front Right
89529	Mitsubishi Eclipse 08-06, Galant 08-04	Front Left
89530	Mitsubishi Eclipse 08-06, Galant 08-04	Front Right
89569	Mitsubishi Outlander 13-07	Front Left
89571	Dodge Colt 95-93; Eagle Summit 96-93; Mitsubishi Mirage 96-93; Plymouth Colt 95-93	Front Left
89572	Dodge Colt 95-93; Eagle Summit 96-93; Mitsubishi Mirage 96-93; Plymouth Colt 95-93	Front Right
89573	Dodge Colt 92-87; Eagle Summit 92-89; Hyundai Elantra 95-92; Mitsubishi Cordia 1983, Mirage 92-87, Tredia 1983; Plymouth Colt 92-87	Front Left
89574	Dodge Colt 92-87; Eagle Summit 92-89; Hyundai Elantra 95-92, Excel 94-90, Scoupe 92-91; Mitsubishi Cordia 1983, Mirage 92-87, Precis 94-90, Tredia 1983; Plymouth Colt 92-87	Front Right
89578	Hyundai Excel 89-86; Mitsubishi Mirage 86-85, Precis 89-87	Front Right
89579	Hyundai Elantra 95-93; Mitsubishi Cordia 88-84, Tredia 88-84	Front Left
89580	Hyundai Elantra 95-93; Mitsubishi Cordia 88-84, Tredia 88-84	Front Right
89581	Dodge Colt 91-84; Eagle Talon 94-90; Mitsubishi Eclipse 94-90, Galant 93-88, Mirage 96-93; Plymouth Colt 94-92, Laser 94-90	Front Left
89582	Dodge Colt 91-84; Eagle Talon 94-90; Mitsubishi Eclipse 94-90, Galant 93-88; Plymouth Colt 94-92, Laser 94-90	Front Right
89583	Hyundai Excel 94-86, Scoupe 92-91; Mitsubishi Mirage 86-85, Precis 94-87	Front Left
89584	Dodge Stealth 96-93; Mitsubishi 3000GT 99-93	Front Right
89587	Mitsubishi Diamante 95-93	Front Right
89601	Mitsubishi Eclipse 99-96, Galant 98-94	Front Left
89602	Mitsubishi Eclipse 99-96, Galant 98-94	Front Right
89603	Mitsubishi Mirage 02-97	Front Left
89604	Mitsubishi Mirage 02-97	Front Right
89605	Mitsubishi Endeavor 11-04	Front Left

BUYER'S GUIDE

Part #	Applications	Position
89606	Mitsubishi Endeavor 11-04	Front Right
89607	Mitsubishi Endeavor 11-04	Front Left
89608	Mitsubishi Endeavor 11-04	Front Right
89671	Mitsubishi Mirage 02-97	Front Left
89672	Mitsubishi Mirage 02-97	Front Right
89673	Mitsubishi Montero 06-97	Front Left
89674	Mitsubishi Montero 06-97	Front Right
90015	Lexus ES350 12-07; Toyota Avalon 12-05, Camry 12-07	Front Right
90024	Toyota Highlander 13-08	Front Left
90026	Toyota Highlander 13-08	Front Right
90089	Lexus IS300 05-01	Rear Right
90091	Lexus IS300 05-01	Rear Left
90100	Lexus RX300 03-00; Toyota Highlander 03-01	Rear Right
	Lexus RX300 03-00; Toyota Highlander 03-01	Rear Left
90101	Lexus RX330 06-04, RX350 09-07; Toyota Camry 06-02, Highlander 07-04, Solara 08-04	Front Left
90102	Lexus RX330 06-04, RX350 09-07; Toyota Camry 06-02, Highlander 07-04, Solara 08-04	Front Right
90103	Lexus RX330 06-04, RX350 09-07	Front Left
90104	Lexus RX330 06-04, RX350 09-07	Front Right
90105	Pontiac Vibe 06-03; Toyota Matrix 06-03	Rear Right
	Pontiac Vibe 06-03; Toyota Matrix 06-03	Rear Left
90107	Pontiac Vibe 06-03; Toyota Corolla 06-05, Matrix 06-04	Front Left
90108	Pontiac Vibe 06-03; Toyota Matrix 06-03	Front Right
90109	Toyota Celica 93-90	Front Left
90111	Toyota Matrix 08-07	Front Left
90113	Toyota Matrix 06-03, Prius 03-01	Front Left
90114	Toyota Prius 03-01	Front Right
90115	Lexus ES350 12-07; Toyota Camry 12-07	Front Left
90117	Toyota Highlander 07-01	Front Left
90118	Toyota Highlander 07-01	Front Right
90119	Toyota Highlander 03-01	Front Left
90120	Toyota Highlander 03-01	Front Right
90121	Toyota Camry 09-07	Front Left
90122	Toyota Camry 09-07	Front Right
90135	Toyota Prius 09-04	Front Left
90137	Toyota Prius 09-04	Front Right
90143	Toyota Camry 11-07	Front Left
90155	Toyota Venza 14-09	Front Right
90159	Toyota Camry 11-07	Front Right
90190	Pontiac Vibe 10-09; Toyota Matrix 12-09	Front Left
90228	Toyota RAV4 12-06	Front Left
90230	Scion xB 12-08	Front Left
90232	Scion xB 12-08	Front Right
90244	Toyota RAV4 12-06	Front Left
90246	Toyota RAV4 12-06	Front Right
90265	Toyota Avalon 12-05, Highlander 12-08	Front Left
90277	Toyota Sequoia 13-08, Tundra 13-07	Front Right
	Toyota Sequoia 13-08, Tundra 13-07	Front Left
90279	Lexus CT200h 14-11; Toyota Prius 14-10	Front Left
90281	Lexus CT200h 14-11; Toyota Prius 14-10	Front Right
90305	Lexus LX570 14-08; Toyota Land Cruiser 10-08	Front Right
	Lexus LX570 14-08; Toyota Land Cruiser 10-08	Front Left
90307	Toyota Yaris 11-07	Front Right
90309	Toyota Yaris 11-07	Front Left
90317	Toyota RAV4 12-06	Front Right
90324	Scion xD 13-08	Front Left
90326	Scion xD 13-08	Front Right
90360	Pontiac Vibe 10-09; Toyota Corolla 10-09, Matrix 12-09	Front Right
90362	Pontiac Vibe 10-09; Toyota Corolla 10-09, Matrix 12-09	Front Left
90363	Lexus RX330 06-04, RX350 09-07; Toyota Highlander 07-04	Rear Right
	Lexus RX330 06-04, RX350 09-07; Toyota Highlander 07-04	Rear Left
90367	Toyota Sienna 10-04	Rear Right
	Toyota Sienna 10-04	Rear Left
90405	Toyota RAV4 00-96	Rear Right
90451	Toyota Highlander 13-08	Front Left
90453	Toyota RAV4 10-06	Rear Right
	Toyota RAV4 10-06	Rear Left
90497	Toyota RAV4 00-96	Rear Left
90501	Chevrolet Prizm 02-98; Geo Prizm 97-93; Toyota Celica 93-90, Corolla 02-93	Front Left
90502	Chevrolet Prizm 02-98; Geo Prizm 97-93; Toyota Celica 93-90, Corolla 02-93	Front Right
90565	Toyota Highlander 13-08, Venza 14-09	Front Right
90567	Toyota Venza 14-09	Front Left
90569	Lexus GS350 11-07, IS250 10-06, IS350 13-11	Front Left
90571	Chevrolet Nova 88-85; Geo Prizm 92-89; Toyota Corolla 92-87	Front Left
90572	Chevrolet Nova 88-85; Geo Prizm 92-89; Toyota Corolla 92-87	Front Right
90601	Lexus ES300 01-97; Toyota Avalon 04-97, Camry 01-97, Sienna 03-98, Solara 03-99	Front Left
90602	Lexus ES300 01-97; Toyota Avalon 04-97, Camry 01-97, Sienna 03-98, Solara 03-99	Front Right
90603	Lexus RX300 03-99	Front Left
90604	Lexus RX300 03-99	Front Right
90607	Scion xA 06-04, xB 06-04; Toyota Echo 05-00	Front Left
90608	Scion xA 06-04, xB 06-04; Toyota Echo 05-00	Front Right
90609	Scion tC 10-05; Toyota RAV4 05-01	Front Left
90610	Scion tC 10-05; Toyota RAV4 05-01	Front Right
90611	Lexus ES300 03-02, ES330 06-04	Front Left
90612	Lexus ES300 03-02, ES330 06-04; Toyota Highlander 12-08	Front Right
90613	Toyota Camry 91-88, Corolla 93-89, RAV4 00-96	Front Left
90614	Toyota Camry 91-88, Corolla 93-89, RAV4 00-96	Front Right
90617	Toyota Camry 06-02, Solara 08-04	Front Left
90618	Toyota Camry 06-02, Solara 08-04	Front Right
90619	Toyota Camry 01-92, Solara 03-99	Front Left
90620	Toyota Camry 01-92, Solara 03-99	Front Right
90622	Toyota Camry 01-97, Solara 03-99	Front Right
90623	Toyota Celica 05-00	Front Left
90624	Toyota Celica 05-00	Front Right
90627	Toyota Celica 05-00	Front Left
90628	Toyota Celica 05-00	Front Right
90629	Toyota Celica 99-94	Front Left
90630	Toyota Celica 99-94	Front Right
90631	Toyota Celica 99-94	Front Left
90632	Toyota Celica 99-94	Front Right
90633	Toyota Celica 97-94	Front Left
90634	Toyota Celica 97-94	Front Right
90637	Toyota Celica 93-90	Front Left
90638	Toyota Camry 91-88, Celica 93-86	Front Right
90639	Toyota Corolla 08-03	Front Left
90640	Toyota Corolla 08-03, Matrix 08-03	Front Right
90641	Toyota Corolla 08-03	Front Left
90642	Pontiac Vibe 10-09; Toyota Corolla 13-03, Matrix 13-09	Front Right
90643	Toyota Paseo 99-92, Tercel 99-87	Front Left
90644	Toyota Paseo 99-92, Tercel 99-87	Front Right
90647	Toyota Highlander 07-01, Solara 08-04	Front Left
90648	Toyota Highlander 07-01, Solara 08-04	Front Right

BUYER'S GUIDE

Part #	Applications	Position
90649	Toyota RAV4 05-01	Front Left
90650	Toyota RAV4 05-01	Front Right
90651	Toyota RAV4 00-96	Front Left
90652	Toyota RAV4 00-96	Front Right
90653	Toyota RAV4 00-96	Front Left
90654	Toyota RAV4 00-96	Front Right
90657	Toyota Sienna 10-04	Front Left
90658	Toyota Sienna 10-04	Front Right
90659	Toyota Sienna 10-04	Front Left
90660	Toyota Sienna 10-04	Front Right
90671	Toyota Camry 91-88, Celica 89-86	Front Left
90674	Toyota Celica 93-90	Front Right
90675	Lexus GX460 14-10, GX470 09-03; Toyota 4Runner 14-03, FJ Cruiser 14-07, Tacoma 12-05	Front Left
	Lexus GX460 14-10, GX470 09-03; Toyota 4Runner 14-03, FJ Cruiser 14-07, Tacoma 12-05	Front Right
90676	Toyota 4Runner 02-96, Tacoma 04-95	Front Left
	Toyota 4Runner 02-96, Tacoma 04-95	Front Right
90677	Toyota Tercel 88-83	Front Left
90678	Toyota Tercel 88-83	Front Right
90685	Lexus LX470 07-98; Toyota Land Cruiser 07-98	Front Right
	Lexus LX470 07-98; Toyota Land Cruiser 07-98	Front Left
90686	Toyota Sequoia 07-01, Tundra 06-00	Front Left
	Toyota Sequoia 07-01, Tundra 06-00	Front Right
90801	Toyota Corolla 88-84	Front Left
90802	Toyota Corolla 88-84	Front Right
90803	Toyota Camry 86-84	Front Right
90875	Toyota Camry 91-83, Celica 89-86	Front Left
	Toyota Camry 91-83, Celica 89-86	Front Right
90876	Toyota T100 98-93	Front Left
	Toyota T100 98-93	Front Right
90885	Toyota 4Runner 95-86, Pickup 95-86	Front Left
	Toyota 4Runner 95-86, Pickup 95-86	Front Right
90886	Toyota Tacoma 00-95	Front Left
	Toyota Tacoma 00-95	Front Right
90895	Toyota Previa 97-91	Front Left
	Toyota Previa 97-91	Front Right
90900	Lexus ES250 91-90; Toyota Camry 91-88, Celica 93-86	Front Left
	Lexus ES250 91-90; Toyota Camry 91-88, Celica 93-88	Front Right
90905	Lexus RX300 03-99	Front Left
	Lexus RX300 03-99	Front Right
90910	Lexus ES300 96-92; Toyota Avalon 97-95, Camry 01-92, Solara 01-99	Front Left
	Lexus ES300 96-92; Toyota Avalon 97-95, Camry 01-92, Solara 01-99	Front Right
90995	Toyota Celica 85-82, Cressida 84-83	Rear Left
	Toyota Celica 85-82, Cressida 84-83	Rear Right
91008	Acura TSX 12-09; Honda Accord 12-08	Front Left
91106	Acura RL 08-05	Front Left
91108	Acura RL 08-05	Front Right
91110	Acura MDX 09-07; Honda Pilot 11-09	Front Left
91112	Acura MDX 09-07; Honda Pilot 11-09	Front Right
91143	Honda Civic 05-03	Front Left
91145	Honda Civic 05-03	Front Right
91149	Honda Fit 11-07	Front Right
91152	Acura CSX 11-07; Honda Civic 11-06	Front Left
91175	Acura TSX 12-10; Honda Accord 12-08	Front Right
91201	Honda Prelude 96-92	Front Left
91203	Honda CR-V 01-97	Front Left
91207	Honda CR-V 01-98	Front Left
91209	Honda Odyssey 98-95; Isuzu Oasis 99-96	Front Left
91212	Acura MDX 02-01; Honda Pilot 04-03	Front Right
91214	Honda Odyssey 10-07	Front Left
91227	Honda Civic 13-06	Front Left
91229	Honda Civic 13-06	Front Right
91231	Honda Prelude 01-97	Front Left
91237	Acura CSX 11-07; Honda Civic 11-06	Front Right
91252	Honda Civic 11-06	Front Right
91272	Honda CR-V 06-02	Front Right
91274	Honda Element 11-03	Front Right
91278	Honda Accord 07-03	Front Right
91298	Honda Passport 95-94; Isuzu Amigo 94-89, Pickup 95-88, Trooper 91-88	Front Left
	Honda Passport 95-94; Isuzu Amigo 94-89, Pickup 95-88, Trooper 91-88	Front Right
91339	Honda Accord 12-08	Front Right
91341	Honda Accord 07-05	Front Right
91343	Honda Accord 07-05	Front Left
91349	Honda Fit 08-07	Front Left
91351	Honda Fit 08-07	Front Right
91353	Honda Insight 14-00	Front Left
91355	Honda Insight 14-00	Front Right
91370	Acura TSX 12-09; Honda Accord 12-08	Front Right
91371	Honda Civic 11-06	Front Right
91373	Acura TSX 12-10; Honda Accord 12-08	Front Left
91392	Honda Civic 11-06	Front Left
91462	Honda Fit 11-09	Front Left
91464	Honda Fit 11-09	Front Right
91466	Honda CR-V 06-02	Rear Right
91468	Honda CR-V 06-02	Rear Left
91472	Acura TL 08-04; Honda Accord 07-03	Front Right
91501	Acura CL 03-01, TL 03-99; Honda Accord 02-98	Front Left
91502	Acura CL 03-01, TL 03-99; Honda Accord 02-98	Front Right
91503	Acura CL 99-97; Honda Accord 97-94	Front Left
91504	Acura CL 99-97; Honda Accord 97-94, Prelude 91-90	Front Right
91507	Acura CL 99-97; Honda Accord 97-94, Prelude 91-90	Front Left
91509	Acura CL 99-97; Honda Accord 97-95	Front Left
91510	Acura CL 99-97; Honda Accord 97-95	Front Right
91511	Acura EL 05-01	Front Left
91513	Honda Accord 93-90	Front Left
91514	Acura TL 08-04	Front Right
91517	Honda Accord 02-98	Front Left
91518	Honda Accord 02-98	Front Right
91519	Honda Accord 02-98	Front Left
91520	Honda CR-V 01-97	Front Right
91521	Acura EL 05-01; Honda Civic 05-01	Front Left
91522	Acura EL 05-01; Honda Civic 05-01	Front Right
91523	Honda Accord 93-90	Front Left
91524	Honda Accord 93-90	Front Right
91527	Honda Civic 05-01	Front Left
91528	Acura EL 05-01; Honda Civic 05-01	Front Right
91529	Honda Civic 00-92, Civic del Sol 97-93	Front Left
91530	Honda Civic 00-92, Civic del Sol 97-93	Front Right
91532	Honda Prelude 01-97	Front Right
91533	Honda Prelude 96-92	Front Left
91534	Honda Prelude 96-92	Front Right
91537	Honda Odyssey 04-99	Front Left
91538	Honda Odyssey 98-95; Isuzu Oasis 99-96	Front Right

BUYER'S GUIDE

Part #	Applications	Position
91539	Honda Pilot 04-03	Front Left
91540	Honda CR-V 01-98	Front Right
91551	Honda Pilot 2005	Front Right
91571	Acura TL 08-04; Honda Accord 07-03	Front Left
91573	Honda Accord 07-03	Front Left
91574	Honda Accord 07-03	Front Right
91577	Honda Accord 07-03, CR-V 06-02	Front Left
91579	Honda Accord 89-86	Front Left
91580	Honda Accord 89-86	Front Right
91581	Honda Accord 89-86	Front Left
91583	Honda Accord 1985	Front Left
91584	Honda Accord 1985	Front Right
91587	Honda Accord 1985	Front Left
91589	Honda Accord 85-84	Front Left
91590	Honda Accord 85-82	Front Right
91591	Honda Accord 85-84	Front Left
91593	Honda Accord 83-82	Front Left
91597	Honda Accord 79-76	Front Left
91598	Honda Accord 79-76	Front Right
91601	Honda CR-V 11-07	Front Left
91602	Honda CR-V 11-07	Front Right
91671	Honda Civic 91-88, CRX 91-88	Front Left
91672	Honda Civic 91-88, CRX 91-88	Front Right
91673	Honda Civic 91-88, CRX 91-88	Front Left
91674	Honda Civic 91-88, CRX 91-88	Front Right
91677	Honda Civic 87-84	Front Left
91678	Honda Civic 87-84	Front Right
91679	Honda Civic 83-80	Front Left
91680	Honda Civic 83-80	Front Right
91681	Honda Civic 87-85	Front Left
91682	Honda Civic 87-85	Front Right
91683	Honda Prelude 89-88	Front Left
91684	Honda Prelude 89-88	Front Right
91687	Honda Prelude 87-85	Front Left
91688	Honda Prelude 87-85	Front Right
91689	Honda Prelude 87-85	Front Left
91691	Honda Prelude 87-84	Front Left
91692	Honda Prelude 87-84	Front Right
91693	Honda Prelude 87-84	Front Left
91694	Honda Civic 11-06	Front Left
91696	Honda Accord 12-08	Front Left
91697	Honda Element 11-03	Front Left
91771	Honda Civic 91-88	Front Left
91772	Honda Civic 91-88	Front Right
92100	Subaru Impreza 11-08, Legacy 09-05, Outback 09-05	Front Left
	Subaru Impreza 11-08, Legacy 09-05, Outback 09-05	Front Right
92101	Subaru Forester 05-03, Impreza 05-02	Rear Left
92105	Subaru DL 86-85, GL 86-85, GL-10 86-85, RX 86-85, XT 86-85	Rear Left
	Subaru DL 86-85, GL 86-85, GL-10 86-85, RX 86-85, XT 86-85	Rear Right
92106	Subaru Impreza 05-02	Front Left
	Subaru Impreza 05-02	Front Right
92172	Subaru Impreza 2004	Front Right
	Subaru Impreza 2004	Front Left
92200	Subaru Baja 06-03, Forester 02-00, Impreza 05-02, Legacy 04-00, Outback 04-00	Front Left
	Subaru Baja 06-03, Forester 02-00, Impreza 05-02, Legacy 04-00, Outback 04-00	Front Right
92275	Subaru Brat 87-82, GL 89-81, Standard 84-80	Front Left
	Subaru Brat 87-82, GL 89-81, Standard 84-80	Front Right
92276	Subaru Forester 99-98, Impreza 01-93, Legacy 99-90, XT 91-85	Front Left
	Subaru Forester 99-98, Impreza 01-93, Legacy 99-90, XT 91-85	Front Right
92281	Subaru Forester 12-09, Impreza 14-12, XV Crosstrek 14-13	Front Right
	Subaru Forester 12-09, Impreza 14-12, XV Crosstrek 14-13	Front Left
92285	Subaru Impreza 94-93	Front Left
	Subaru Impreza 94-93	Front Right
92286	Subaru Justy 94-90	Front Left
	Subaru Justy 94-91	Front Right
92296	Subaru Tribeca 11-08	Front Left
	Subaru Tribeca 11-08	Front Right
92322	Subaru Forester 08-04, Impreza 07-05	Front Left
	Subaru Forester 08-04, Impreza 07-05	Front Right
92370	Subaru 1400 74-73, Brat 81-78, DL 75-73, GF 1975, GL 75-72, Standard 79-76	Front Left
	Subaru 1400 74-73, Brat 81-78, DL 75-73, GF 1975, GL 75-72, Standard 79-76	Front Right
92505	Subaru Forester 08-03, Impreza 2003	Front Right
	Subaru Forester 08-03, Impreza 2003	Front Left
92575	Subaru Impreza 01-93	Rear Left
	Subaru Impreza 01-93	Rear Right
92671	Saab 9-2X 2005; Subaru Forester 02-01, Impreza 05-00	Rear Left
92672	Saab 9-2X 2005; Subaru Forester 05-98, Impreza 05-95, Legacy 99-95	Rear Right
	Subaru Baja 06-04, Impreza 2005	Front Left
	Subaru Baja 06-04, Impreza 2005	Front Right
	Subaru Forester 00-98, Impreza 00-95, Legacy 99-95	Rear Left
92775	Subaru RX 89-86, XT 87-85	Front Right
	Subaru RX 89-86, XT 87-85	Front Left
92776	Subaru Loyale 94-90, Standard 87-85, SVX 97-92	Front Left
	Subaru Loyale 94-90, Standard 87-85, SVX 97-92	Front Right
92954	Subaru Legacy 04-00, Outback 04-00	Rear Left
92956	Subaru Legacy 04-00, Outback 04-00	Rear Right
93056	Nissan Altima 12-07, Rogue 12-08, Sentra 12-07	Front Right
93058	Nissan Altima 12-07, Rogue 12-08, Sentra 12-07	Front Left
93078	Nissan Quest 09-04	Front Right
93101	Infiniti G35 07-03, M45 04-03; Nissan 350Z 09-03	Rear Left
93102	Infiniti M45 04-03	Rear Right
93110	Nissan Maxima 01-00	Front Left
93111	Infiniti FX35 08-03, FX45 08-03	Front Right
93112	Infiniti FX35 08-03	Front Left
93113	Infiniti FX45 08-03	Front Left
93114	Infiniti I30 99-96; Nissan Maxima 99-95	Front Left
93117	Nissan Altima 04-02, Maxima 08-04	Front Left
93118	Nissan Altima 04-02, Maxima 2004	Front Right
93119	Nissan Sentra 01-00	Front Left
93120	Nissan NX 93-91, Sentra 01-00	Front Right
93131	Nissan 200SX 1998, Sentra 99-98	Front Left
93141	Nissan Murano 12-09	Front Right
93144	Nissan Rogue 13-08	Front Left
93146	Nissan Rogue 13-08	Front Right
93184	Infiniti Q45 06-02; Kia Sportage 10-05	Rear Left
	Infiniti G35 07-03; Nissan 350Z 09-03	Rear Right
93250	Nissan Altima 11-07	Front Left
93252	Nissan Altima 11-07	Front Right
93274	Infiniti G20 96-94	Front Right
93307	Nissan Sentra 12-07	Front Right

BUYER'S GUIDE

Part #	Applications	Position
93309	Nissan Altima 12-07	Front Right
93311	Nissan Altima 12-07	Front Left
93326	Nissan Maxima 11-09	Front Left
93345	Nissan Versa 12-07	Front Left
93347	Nissan Versa 12-07	Front Right
93350	Nissan Cube 12-09, Versa 12-07	Front Right
93370	Nissan Sentra 12-07	Front Left
93372	Nissan Sentra 12-07	Front Left
93377	Nissan Versa 12-07	Front Left
93422	Nissan 200SX 1998, Sentra 99-98	Front Right
93434	Nissan Cube 12-09, Versa 12-07	Front Left
93436	Nissan Cube 12-09, Versa 12-07	Front Right
93447	Nissan Altima 12-07, Sentra 12-07	Front Right
93449	Nissan Maxima 08-07	Front Right
93450	Nissan Murano 12-09	Front Right
93451	Infiniti G25 12-11, G35 08-04, G37 14-09	Front Right
93452	Nissan Murano 12-09	Front Left
93488	Nissan Maxima 11-09	Front Right
93501	Infiniti I30 01-00, I35 04-02; Nissan Maxima 03-00	Front Left
93502	Infiniti I30 01-00, I35 04-02; Nissan Maxima 03-00	Front Right
93503	Infiniti I30 01-00; Nissan Maxima 01-00	Front Left
93507	Infiniti I30 99-96; Nissan Maxima 99-95	Front Left
93508	Infiniti I30 99-96; Nissan Maxima 99-95	Front Right
93509	Infiniti I30 99-96; Nissan Maxima 99-95	Front Left
93511	Nissan Maxima 01-00	Front Right
93601	Mercury Villager 02-93; Nissan Quest 02-93	Front Left
93602	Mercury Villager 02-93; Nissan Quest 02-93	Front Right
93603	Nissan Altima 06-02, Maxima 06-04	Front Left
93604	Nissan Altima 06-02, Maxima 06-04	Front Right
93607	Nissan Altima 01-98	Front Right
93608	Nissan Altima 01-98	Front Left
93609	Nissan Altima 06-02, Maxima 06-04	Front Left
93610	Nissan Altima 06-02, Maxima 06-04	Front Right
93611	Nissan Altima 06-02	Front Left
93612	Nissan Altima 06-02	Front Right
93613	Nissan Altima 06-02	Front Left
93614	Nissan Altima 06-02	Front Right
93617	Nissan Altima 01-98	Front Left
93618	Nissan Altima 01-98	Front Right
93619	Nissan Altima 97-93	Front Left
93620	Nissan Altima 97-93	Front Right
93621	Nissan Altima 97-93	Front Left
93622	Nissan Maxima 94-92	Front Left
93623	Nissan Altima 97-93, Axxess 95-90	Front Left
93624	Nissan Altima 97-93, Axxess 95-90, Maxima 88-85, Stanza 92-86	Front Right
93625	Nissan NX 93-91, Sentra 94-91	Front Left
93626	Nissan NX 93-91, Sentra 94-91	Front Right
93627	Nissan Altima 97-93	Front Left
93628	Nissan Altima 97-93	Front Right
93629	Nissan Maxima 03-02	Front Left
93630	Nissan Maxima 03-02	Front Right
93631	Nissan Maxima 94-92	Front Left
93632	Nissan Maxima 94-92	Front Right
93633	Nissan Maxima 94-92	Front Left
93634	Nissan Maxima 94-92	Front Right
93635	Nissan Maxima 94-92	Front Left
93637	Nissan Maxima 94-85, Stanza 92-87	Front Left
93638	Nissan Maxima 94-89	Front Right
93639	Nissan 200SX 98-95, NX 93-91, Sentra 94-91	Front Left
93640	Nissan 200SX 98-95, Sentra 94-91	Front Right
93642	Nissan Sentra 06-00	Front Right
93644	Nissan Sentra 05-00	Front Right
93647	Nissan Sentra 06-02	Front Left
93648	Nissan Sentra 06-02	Front Right
93649	Nissan Sentra 06-02	Front Left
93650	Nissan Sentra 06-02	Front Right
93651	Nissan Stanza 92-90	Front Left
93652	Nissan Stanza 92-90	Front Right
93653	Nissan Frontier 14-05, Pathfinder 10-05, Xterra 14-05	Front Left
	Nissan Frontier 14-05, Pathfinder 10-05, Xterra 14-05	Front Right
93660	Nissan Versa 12-09	Front Left
93662	Nissan Versa 12-09	Front Right
93705	Nissan Sentra 12-07	Front Right
93707	Infiniti I30 99-96; Nissan Maxima 99-95	Front Left
93723	Nissan Altima 12-07, Sentra 12-07	Front Left
93751	Nissan NX 93-91, Sentra 01-95	Front Left
93752	Nissan 200SX 98-95, NX 93-91, Sentra 99-91	Front Right
93753	Nissan 200SX 98-95, Sentra 06-91	Front Left
93771	Nissan Sentra 92-91	Front Left
93772	Nissan Sentra 92-91	Front Right
93773	Nissan Stanza 88-86	Front Left
93777	Nissan Pulsar NX 90-87, Sentra 90-87	Front Left
93778	Nissan Pulsar NX 90-87, Sentra 90-87	Front Right
93781	Nissan Pulsar NX 86-83, Sentra 86-82	Front Left
93782	Nissan Pulsar NX 86-83, Sentra 86-82	Front Right
93787	Nissan Murano 07-03	Front Left
93788	Nissan Murano 07-03	Front Right
93789	Nissan Murano 07-03	Front Right
93791	Nissan Quest 06-04	Front Left
93792	Nissan Quest 06-04	Front Right
93871	Nissan 720 86-83	Front Left
93872	Nissan 720 86-83	Front Right
93875	Infiniti QX4 03-97; Nissan D21 1994, Pathfinder 04-96	Front Right
	Infiniti QX4 03-97; Nissan D21 1994, Pathfinder 04-96	Front Left
93876	Infiniti QX56 12-04; Nissan Armada 14-05, Titan 14-04	Front Right
	Infiniti QX56 12-04; Nissan Armada 14-05, Titan 14-04	Front Left
93880	Nissan Frontier 04-98, Xterra 04-00	Front Left
	Nissan Frontier 04-98, Xterra 04-00	Front Right
93881	Nissan 240SX 98-89	Rear Left
93882	Nissan 240SX 98-95	Rear Right
93883	Nissan 240SX 94-89	Rear Right
93885	Nissan 280ZX 83-81	Rear Left
	Nissan 280ZX 83-81	Rear Right
93886	Nissan 280Z 78-75, 280ZX 83-79	Rear Left
	Nissan 280Z 78-75, 280ZX 83-79	Rear Right
93895	Nissan D21 94-90, Pathfinder 95-90	Front Right
	Nissan D21 94-90, Pathfinder 95-90	Front Left
93896	Nissan D21 93-86, Pathfinder 89-87	Front Left
	Nissan D21 93-86, Pathfinder 89-87	Front Right
94211	Acura RDX 12-07	Front Right
94212	Acura RDX 12-07	Front Left
94213	Acura TL 12-09	Front Left
94411	Acura RL 04-96, TL 98-96	Front Left
94414	Acura RSX 06-02; Honda Civic 05-02	Front Right
94418	Acura RSX 06-02	Front Right

BUYER'S GUIDE

Part #	Applications	Position
94420	Acura TL 98-95	Front Right
94422	Acura Vigor 94-92	Front Right
94424	Acura MDX 06-03; Honda Pilot 08-06	Front Right
94428	Honda Odyssey 04-99	Front Right
94430	Acura MDX 14-10, ZDX 13-10	Front Right
94432	Acura MDX 14-10, ZDX 13-10	Front Left
94474	Acura TSX 08-04	Front Right
94479	Acura TL 12-09	Front Right
94501	Acura Integra 01-94; Honda Civic 00-99, Civic del Sol 97-93	Front Left
94502	Acura Integra 01-90; Honda Civic 00-99, Civic del Sol 97-93	Front Right
94503	Acura Integra 93-90	Front Left
94507	Acura Legend 95-91	Front Left
94508	Acura Legend 95-91	Front Right
94509	Acura Legend 90-86	Front Left
	Acura Legend 88-86	Front Right
94510	Acura Legend 90-89	Front Right
94512	Acura RL 04-96, TL 98-96	Front Right
94513	Acura RSX 06-02; Honda Civic 05-02	Front Left
94517	Acura RSX 06-02	Front Left
94519	Acura TL 98-95	Front Left
94521	Acura Vigor 94-92	Front Left
94523	Acura MDX 06-03	Front Left
94527	Acura MDX 02-01	Front Left
94571	Acura Integra 89-86	Front Left
94572	Acura Integra 89-86	Front Right
94573	Acura TSX 08-04	Front Left
95101	Infiniti G20 02-99	Front Left
95102	Infiniti G20 02-99	Front Right
95103	Infiniti G20 02-99	Front Left
95104	Infiniti G20 02-99	Front Right
95399	Infiniti G25 12-11, G35 08-07, G37 14-09	Front Left
95501	Infiniti G20 02-99	Front Left
95502	Infiniti G20 02-99	Front Right
95503	Infiniti G20 96-91	Front Left
95504	Infiniti G20 96-91	Front Right
95507	Infiniti G20 96-94	Front Left
95653	Infiniti G35 06-04	Front Left
95871	Infiniti Q45 01-97	Rear Left
95872	Infiniti Q45 01-97	Rear Right
96202	Isuzu Stylus 1992	Front Right
96230	Isuzu Trooper 95-92	Front Left
	Isuzu Trooper 95-92	Front Right
96501	Geo Storm 93-92; Isuzu I-Mark 89-85, Impulse 92-90, Stylus 1992	Front Left
96502	Geo Storm 93-92; Isuzu I-Mark 89-85, Impulse 92-90	Front Right
96504	Isuzu Impulse 92-91	Front Right
96508	Isuzu Trooper 1995	Front Left
96571	Chevrolet Spectrum 88-85; Geo Spectrum 1989; Isuzu I-Mark 89-85; Pontiac Sunburst 88-85	Front Left
96572	Chevrolet Spectrum 88-85; Geo Spectrum 1989; Isuzu I-Mark 89-85; Pontiac Sunburst 88-85	Front Right
96573	Chevrolet Spectrum 88-85; Geo Spectrum 1989; Pontiac Sunburst 88-85	Front Left
96574	Chevrolet Spectrum 88-85; Geo Spectrum 1989; Pontiac Sunburst 88-85	Front Right
96575	Acura SLX 99-96; Isuzu Trooper 02-96	Front Left
	Acura SLX 99-96; Isuzu Trooper 02-95	Front Right
96576	Honda Passport 01-98; Isuzu Amigo 00-98, Rodeo 01-98	Front Right
	Honda Passport 01-98; Isuzu Amigo 00-98, Rodeo 01-98	Front Left
96580	Geo Storm 93-90; Isuzu Stylus 93-91	Front Right
96581	Isuzu Amigo 94-89, Pickup 95-88, Rodeo 95-91, Trooper 91-88	Front Left
96582	Isuzu Amigo 94-89, Pickup 95-88, Rodeo 95-91, Trooper 91-88	Front Right
96585	Honda Passport 97-96; Isuzu Axiom 04-02	Front Left
	Honda Passport 97-96; Isuzu Axiom 04-02	Front Right
96586	Isuzu Rodeo 97-96	Front Left
	Isuzu Rodeo 97-96	Front Right
97101	Chevrolet Optra 07-04; Suzuki Forenza 08-04, Reno 08-05	Front Left
97102	Chevrolet Optra 07-04; Suzuki Forenza 08-04, Reno 08-05	Front Right
97103	Chevrolet Optra 07-04; Suzuki Forenza 08-04, Reno 08-05	Front Left
97104	Chevrolet Optra 07-04; Suzuki Forenza 08-04, Reno 08-05	Front Right
97105	Suzuki Aerio 2003, Esteem 02-99	Front Left
97107	Suzuki Aerio 07-04	Front Left
97108	Suzuki Aerio 07-04	Front Right
97109	Suzuki Aerio 07-02	Front Left
97110	Suzuki Aerio 07-04	Front Right
97112	Suzuki Aerio 03-02, Esteem 02-99	Front Right
97113	Suzuki Grand Vitara 05-99, XL-7 03-02	Front Right
97117	Suzuki Esteem 02-99	Front Left
97118	Suzuki Esteem 02-99	Front Right
97119	Suzuki XL-7 06-04	Front Right
97137	Suzuki Swift 94-89	Front Left
97138	Suzuki Swift 94-89	Front Right
97334	Suzuki Aerio 2003	Front Right
97471	Suzuki XL-7 09-07	Front Left
97572	Chevrolet Tracker 04-99; Suzuki Grand Vitara 05-99, Vitara 04-99, XL-7 03-02	Front Right
97573	Chevrolet Tracker 91-89; Geo Tracker 95-89; Suzuki Sidekick 98-89, X-90 98-96	Front Right
97574	Chevrolet Tracker 1998; Geo Tracker 97-96; Suzuki Sidekick 98-96	Front Right
97811	Suzuki Esteem 01-95	Front Left
97812	Suzuki Esteem 01-95	Front Right
97871	Chevrolet Tracker 04-99; Suzuki Grand Vitara 05-99, Sidekick 98-96, Vitara 2004, XL-7 06-02	Front Left
97873	Chevrolet Tracker 98-89; Geo Tracker 97-89; Suzuki Sidekick 98-89, X-90 98-96	Front Left
97881	Suzuki Esteem 01-99	Front Left
97882	Suzuki Esteem 01-99	Front Right
97883	Suzuki Aerio 03-02	Front Left
97887	Suzuki Swift 94-89	Front Left
97888	Suzuki Swift 94-89	Front Right
97901	Suzuki Grand Vitara 05-99, Vitara 03-99, XL-7 03-02	Front Left
98100	Mazda RX-7 91-86	Rear Left
	Mazda RX-7 91-86	Rear Right
98101	Mazda 3 05-04	Front Left
98102	Mazda 3 05-04	Front Right
98103	Mazda 3 10-04, 5 10-06	Front Left
98104	Mazda 3 06-04	Front Right
98107	Mazda 3 06-04, 5 08-06	Front Left
98108	Mazda 3 05-04	Front Left
98109	Mazda 3 05-04	Front Right
98110	Mazda 3 05-04	Front Left
98111	Mazda 3 05-04	Front Right
98112	Mazda 3 05-04	Front Left
98117	Ford Fusion 09-06; Mazda 6 08-06; Mercury Milan 09-06	Front Left
98118	Mazda 6 08-06	Front Right
98119	Mazda 6 07-06	Front Left

BUYER'S GUIDE

Part #	Applications	Position
98120	Mazda 6 07-06	Front Right
98183	Mazda Miata 05-95	Rear Left
	Mazda Miata 05-95	Rear Right
98196	Mazda MPV 06-02	Front Left
98198	Mazda MPV 06-02	Front Right
98202	Ford Probe 92-89; Mazda 626 91-88, MX-6 92-88	Front Right
98204	Ford Probe 97-93; Mazda 626 02-93, MX-6 97-93	Front Right
98208	Ford Probe 92-89; Mazda 626 92-88, MX-6 92-88	Front Right
98213	Mazda MX-3 95-92, Protege 98-95	Front Left
98214	Mazda MX-3 95-92	Front Right
98261	Mazda 3 10-06, 5 08-06	Front Right
98263	Mazda 3 2006	Front Right
98274	Ford Fusion 09-06; Mazda 6 08-03; Mercury Milan 09-06	Front Right
98278	Ford Ranger 00-98; Mazda B2500 00-98, B3000 00-98, B4000 00-98	Front Right
98283	Mazda CX-7 12-07, CX-9 12-07	Front Right
98285	Mazda CX-7 12-07, CX-9 12-07	Front Left
98301	Mazda 6 08-03; Mercury Milan 09-06	Front Right
98303	Mazda MPV 98-96	Front Left
98304	Mazda MPV 98-96	Front Right
98319	Mazda 3 10-07	Front Left
98371	Mazda MPV 95-89	Front Left
98372	Mazda MPV 95-89	Front Right
98373	Mazda B2000 1987, B2200 93-87, B2600 93-87	Front Left
98374	Mazda B2000 1987, B2200 93-87, B2600 93-87	Front Right
98501	Ford Fusion 09-06; Lincoln Zephyr 2006; Mazda 6 08-05; Mercury Milan 09-06	Front Left
98503	Ford Probe 97-94; Mazda 626 02-94, MX-6 97-94	Front Left
98507	Ford Probe 97-93; Mazda 626 02-93, MX-6 97-93	Front Left
98509	Ford Probe 92-89; Mazda 626 92-88, MX-6 92-88	Front Left
98511	Ford Probe 92-89; Mazda 626 91-88, MX-6 92-88	Front Left
98513	Kia Sephia 97-96; Mazda MX-3 95-92, Protege 98-95	Front Left
98514	Mazda MX-3 95-94, Protege 98-95	Front Right
98517	Mazda MX-3 93-92, Protege 98-95	Front Right
98558	Mazda RX-7 91-87	Rear Left
	Mazda RX-7 91-87	Rear Right
98571	Ford Festiva 93-88; Mercury Tracer 89-87	Front Right
98573	Ford Fusion 09-06; Mazda 6 08-03; Mercury Milan 09-06	Front Left
98577	Ford Ranger 00-98; Mazda B2500 00-98, B3000 00-98, B4000 00-98	Front Left
98601	Mazda 6 08-03	Front Left
98602	Mazda 6 08-03	Front Right
98603	Mazda 6 04-03	Front Left
98605	Mazda Millenia 02-95	Front Left
98606	Mazda Millenia 02-95	Front Right
98607	Mazda Millenia 02-98	Front Left
98608	Mazda Millenia 02-95	Front Right
98609	Mazda Protege 03-99	Front Left
98610	Mazda Protege 03-99	Front Right
98611	Kia Sephia 1995; Mazda Protege 03-99	Front Left
98613	Mazda Protege 03-01	Front Left
98617	Mazda MPV 01-00	Front Left
98618	Mazda MPV 01-00	Front Right
98672	Mercury Tracer 89-87	Front Left
98673	Mazda 626 87-83	Front Left
98674	Mazda 626 87-83	Front Right
98707	Mazda Millenia 00-95	Front Left
98800	Mazda 929 95-92	Rear Left
	Mazda 929 95-92	Rear Right
N/A	Toyota Solara 03-02; Volvo S60 2001	Front Left
	Dodge Aries 83-82	Front Right
NA	Dodge Colt 90-89	Front Left

SPECIFICATIONS

Part #	IBJ Splines	OBJ Splines	ABS Count	IBJ Type	Comp. Length MM	Comp. Length Inch
10522	33	34	0	Female	556	21 14/16
11932	28	30	44	Male	614	24 3/16
11933	28	30	44	Male	578	22 12/16
22100	27	25	0	Male	783	30 13/16
22200	27	25	44	Female	675	26 9/16
22276	27	25	0	Female	682	26 14/16
22281	27	25	0	Male	795	31 5/16
22505	27	25	0	Male	764	30 1/16
22565	28	0	50		727	28 10/16
22566	28	0	50		682	26 14/16
29066	36	35	48		480.5	18 15/16
29068	36	35	48		715	28 3/16
36001	28	29	0	Male	681	26 13/16
36249	30	29	50	Male	710	27 15/16
36263	30	29	0	Male	701	27 10/16
36264	30	29-2	0	Male	682	26 14/16
37320	27	27	47	Male	678	26 11/16
37321	27	27	47	Male	971	38 4/16
37322	27	27	47	Male	665	26 3/16
37324	30	28	47	Male	657	25 14/16
37325	30	28	47	Female	975	38 6/16
38092	29	29	48	Male	997	39 4/16
38101	28	25	0	Male	633	24 15/16
38102	28	25	0	Male	595	23 7/16
38105	28	23	0	Male	806	31 12/16
38261	24	24	0	NO IB	1005	39 9/16
38263	24	24	0	NO IB	654	25 12/16
38321	24	24	60	NO IB	1007	39 10/16
38323	24	24	60	NO IB	654	25 12/16
38350	30	30	48	Male	633	24 15/16
38352	30	30	48	Male	969	38 2/16
40046	17	0	0	NO IB	506	19 15/16
40211	17	0	0	NO IB	441	17 6/16
40227	17	17	0	Male	558	21 15/16
40251	30	29	0	Male	721	28 6/16
40252	30	29-2	0	Female	684	26 15/16
40617	17	0	0	NO IB	494	19 7/16
40618	17	0	0	NO IB	474	18 11/16
47951	28	26	0	Male	625	24 10/16
47952	28	28-2	0	Female	590	23 4/16
50110	33	0	0	Bolt On	519	20 7/16
55107	27	26	0	Male	629	24 12/16
55108	27	23	0	Male	970	38 3/16
62526	27	25	44	Male	768	30 4/16
66530	27	25	44	Male	776	30 9/16
70025	33	34	0	Male	960	37 13/16
70067	30	27	0	Female	550	21 10/16
70069	30	27	0	Male	610	24
70080	30	27	0	Male	589	23 3/16
70082	33	28	0	Male	630	24 13/16
70089	33	34	48	Female	532	20 15/16
70091	30	27	0	Male	800	31 8/16
70093	30	27	0	Male	870	34 4/16
70095	30	27	0	Male	770	30 5/16
70097	30	27	0	Male	840	33 1/16
70102	33	34	48	Female	643	25 5/16
70104	30	34	0	Male	600	23 10/16
70105	27	0	48	Bolt On	631	24 13/16
70111	22	22	47	Male	600	23 10/16
70112	22	22	47	Male	933	36 12/16
70113	22	34	47	Male	613	24 2/16
70114	22	34	47	Male	922	36 5/16
70116	27	28	0	Male	584	23
70119	28	34	0	Male	597	23 8/16
70120	28	26	0	Female	554	21 13/16
70121	30	34	0	Male	605	23 13/16
70122	30	34	0	Male	940	37
70123	33	34	48	Male	572	22 8/16
70124	26	20	48	Male	929	36 9/16
70127	30	27	0	Male	605	23 13/16
70128	30	27	0	Female	546	21 8/16
70129	26	20	48	Male	642	25 4/16
70130	26	20	48	Male	946	37 4/16
70131	33	34	0	Female	523	20 9/16
70135	33	34	0	Male	953	37 8/16
70137	33	34	0	Male	646	25 7/16
70171	33	0	0	Bolt On	554	21 13/16
70201	27	35	47	Female	549	21 10/16
70202	33	34	48	Female	524	20 10/16
70203	33	34	0	Female	541	21 5/16
70205	33	34	48	Female	526	20 11/16
70206	33	34	29	Female	550	21 10/16
70207	33	35	47	Female	546	21 8/16
70209	33	35	47	Female	519	20 7/16
70211	33	35	48	Female	516	20 5/16
70213	33	34	47	Female	523	20 9/16
70217	33	34	48	Female	535	21 1/16
70225	33	22	0	Male	772	30 6/16
70227	33	22	0	Male	831	32 11/16
70257	33	34	0	Female	608	23 15/16
70271	33	34	0	Female	560	22 1/16
70272	33	34	0	Female	548	21 9/16
70273	33	35	0	Female	555	21 14/16
70274	30	34-1	0	Female	678	26 11/16
70275	33	34	0	Female	725	28 9/16
70276	33	41	0	Female	541	21 5/16
70277	33	34	0	Female	515	20 4/16
70278	33	34	0	Female	532	20 15/16
70279	33	35	0	Female	511	20 2/16
70280	33	34	0	Female	742	29 3/16
70281	27	34	47	Female	532	20 15/16
70282	27	26	0	Female	542	21 5/16
70283	27	35	47	Female	532	20 15/16
70284	33	34	0	Female	616	24 4/16
70285	33	41	0	Female	566	22 5/16
70286	33	41	0	Female	576	22 11/16
70288	27	26	0	Female	597	23 8/16
70289	33	35	0	Female	519	20 7/16
70291	33	35	0	Female	538	21 3/16
70293	33	34	48	Female	518	20 6/16
70295	33	34	0	Female	522	20 9/16
70296	30	34	0	Female	550	21 10/16
70297	33	34	0	Female	568	22 6/16
70299	33	34	0	Female	575	22 10/16
70301	22	34	0	Female	521	20 8/16
70302	22	34	0	Male	611	24 1/16
70303	33	34	0	Female	563	22 3/16
70304	33	29	0	Male	644	25 6/16
70312	30	27	0	Male	619	24 6/16
70314	30	27	0	Male	610	24
70348	33	34	0	Male	612	24 2/16
70375	30	34	0	Female	536	21 2/16
70376	33	26	0	Female	598	23 9/16
70380	33	27	0	Female	604	23 12/16
70385	33	26	0	Female	570	22 7/16
70399	30	27	0	Female	572	22 8/16
70401	32	27	0	Male	685	26 15/16
70416	36	0	0	Bolt On(8 bolt	584	23
70418	33	34	48	Male	940	37
70501	33	27	0	Male	586	23 1/16
70502	27	34	47	Male	695	27 6/16
70503	33	34	47	Male	680	26 12/16
70504	27	34	47	Male	652.5	25 11/16
70508	33	34	47	Male	680	26 12/16
70510	33	34	47	Male	594	23 6/16
70511	33	34	47	Male	642	25 4/16
70512	33	34	48	Male	540	21 4/16
70513	33	34	48	Male	584	23
70514	33	34	48	Male	924	36 6/16
70518	33	34	48	Male	651	25 10/16
70519	33	34	48	Male	596	23 7/16
70520	33	34	48	Male	960	37 13/16
70521	33	34	29	Male	612	24 2/16
70522	33	34	29	Male	973	38 5/16

SPECIFICATIONS

Part #	IBJ Splines	OBJ Splines	ABS Count	IBJ Type	Comp. Length MM	Comp. Length Inch
70523	33	34	47	Male	627	24 11/16
70524	33	34	47	Female	568	22 6/16
70527	31	34	47	Male	627	24 11/16
70528	31	34	47	Female	570	22 7/16
70531	28	28	44	Male	630	24 13/16
70571	33	27	0	Male	616	24 4/16
70572	33	34	0	Male	635	25
70573	33	34	0	Male	658	25 14/16
70574	33	39	0	Male	645	25 6/16
70575	27	26	0	Male	704	27 11/16
70577	33	34	0	Male	628	24 12/16
70578	33	34	0	Male	674	26 9/16
70580	33	34	0	Male	595	23 7/16
70582	33	34	0	Male	624	24 9/16
70584	27	34	0	Male	652.5	25 11/16
70588	33	34	0	Male	680.5	26 13/16
70590	33	34	0	Male	641	25 4/16
70591	33	34	0	Male	654	25 12/16
70592	33	39	0	Male	625	24 10/16
70594	33	34	0	Male	620	24 7/16
70597	33	34	0	Male	584	23
70598	33	34	0	Male	924	36 6/16
70601	33	34	47	Male	581	22 14/16
70602	33	34	47	Female	539	21 4/16
70603	33	34	47	Male	634	24 15/16
70607	26	23	48	Male	647	25 8/16
70608	26	23	48	Male	911	35 14/16
70609	26	20	48	Male	911	35 14/16
70610	26	20	48	Male	645	25 6/16
70611	33	34	0	Male	622	24 8/16
70612	33	34	0	Female	757	29 13/16
70671	33	34	0	Male	591	23 4/16
70672	33	34	48	Male	624	24 9/16
70673	33	34	0	Male	952	37 8/16
70674	33	34	0	Male	998	39 5/16
70675	30	41	0	Female	735	28 15/16
70676	33	34	0	Male	655	25 13/16
70677	27	34	47	Male	590	23 4/16
70678	27	34	47	Male	1003	39 8/16
70679	23	22	0	Male	667	26 4/16
70680	23	22	0	Male	756	29 12/16
70681	27	26	0	Male	596	23 7/16
70683	27	26	0	Male	648	25 8/16
70687	38	37	0	Male	638	25 2/16
70688	38	37	0	Male	1051	41 6/16
70691	30	27	0	Male	625	24 10/16
70692	30	34	0	Female	560	22 1/16
70758	33	34	0	Male	600	23 10/16
70771	38	28	0	Male	671	26 7/16
70772	38	28	0	Male	1020	40 3/16
70774	38	37	0	Male	1050	41 5/16
70777	33	34	0	Male	593	23 6/16
70778	33	34	0	Male	953	37 8/16
70780	33	34	0	Male	965	38
70805	33	0	55	Bolt On	533	21
70875	33	0	0	Bolt On	520	20 8/16
70876	27	0	0	Bolt On	540	21 4/16
70885	27	0	0	Bolt On	492	19 6/16
70886	33	0	0	Bolt On	578	22 12/16
70905	33	0	55	Bolt On	537	21 2/16
70971	27	0	0	Bolt On	528	20 13/16
70972	27	0	0	Bolt On	528	20 13/16
70975	33	0	0	Bolt On	550	21 10/16
70976	33	0	0	Bolt On	626	24 10/16
70985	33	0	0	Bolt On	537	21 2/16
71001	38	27	0	Male	1090	42 15/16
71005	26	0	0	NO IB	497	19 9/16
71058	29	31	54	Male	842	33 2/16
71060	29	31	54	Male	833	32 13/16
71062	29	31	54	Male	805	31 11/16
71102	28	28	46	Male	833	32 13/16
71170	45	31	0	Female	560	22 1/16
71172	28	28-2	44	Female	524	20 10/16
71174	45	31	0	Male	635	25
71176	28	35	44	Male	677	26 10/16
71178	28	28-2	44	Female	605	23 13/16
71180	24	24	44	Male	887	34 15/16
71189	33	34	0	Male	921.5	36 4/16
71191	38	25	0	Male	924	36 6/16
71201	26	35	50	Female	587	23 2/16
71202	26	26-2	44	Female	619	24 6/16
71203	26	35	50	Female	552	21 12/16
71204	28	35-1	44	Female	545	21 7/16
71208	27	35-1	44	Female	568	22 6/16
71210	26	35	50	Male	720	28 6/16
71212	27	35-1	44	Female	568	22 6/16
71214	28	28-2	44	Female	522	20 9/16
71217	28	35	44	Male	633	24 15/16
71222	26	28-2	44	Female	594	23 6/16
71224	25	34	0	Male	948	37 5/16
71228	26	35	50	Female	632	24 14/16
71232	28	35	44	Female	562	22 2/16
71240	28	28	46	Male	789	31 1/16
71242	28	28	46	Male	846	33 5/16
71246	28	35	44	Male	657	25 14/16
71248	31	27	48	Male	645	25 6/16
71250	31	27	44	Male	1060	41 12/16
71252	31	27	44	Male	1060	41 12/16
71264	29	31	54	Male	814	32 1/16
71271	26	35	0	Female	587	23 2/16
71272	27	27-1	0	Female	587	23 2/16
71274	27	27-1	0	Female	590	23 4/16
71276	27	27-1	0	Female	525	20 11/16
71278	27	27-1	0	Female	516	20 5/16
71285	28	27	0	Male	1060	41 12/16
71301	26	35	50	Female	568	22 6/16
71302	26	35	50	Male	665	26 3/16
71312	29	29	54	Male	638	25 2/16
71370	38	27	0	Male	660	26
71371	27	27	0	Male	655	25 13/16
71372	27	27-1	0	Female	583	22 15/16
71388	38	25	0	Male	875	34 7/16
71461	25	26	0	Male	627	24 11/16
71463	40	31	0	Male	523	20 9/16
71465	40	28	0	Male	996	39 3/16
71492	28	25	44	Male	839	33 1/16
71494	25	28	44	Male	895	35 4/16
71501	24	24	44	Male	608	23 15/16
71502	24	24	44	Male	906	35 11/16
71503	24	22	44	Male	615	24 3/16
71504	24	22	44	Male	887	34 15/16
71507	27	35	44	Male	667	26 4/16
71508	26	35	50	Male	645	25 6/16
71509	27	26	44	Male	618	24 5/16
71510	26	35	50	Male	678	26 11/16
71511	27	35	44	Male	668	26 5/16
71512	26	35	50	Male	686	27
71513	27	26	44	Male	618	24 5/16
71514	26	35	50	Male	720	28 6/16
71517	26	24	44	Male	626	24 10/16
71518	26	24	44	Male	903	35 9/16
71519	26	26	44	Male	609	24
71520	26	26	44	Male	918	36 2/16
71521	26	26	44	Male	603	23 12/16
71523	25	34	0	Male	605	23 13/16
71527	26	26	50	Male	622	24 8/16
71529	28	35	44	Male	671	26 7/16
71533	26	23	44	Male	798	31 7/16
71534	26	23	44	Male	850	33 7/16
71538	26	35	50	Female	586	23 1/16
71543	35	34	0	Male	873	34 6/16
71545	35	34	0	Male	915	36
71555	25	26	0	Male	960	37 13/16
71569	38	27	0	Male	1162	45 12/16

SPECIFICATIONS

Part #	IBJ Splines	OBJ Splines	ABS Count	IBJ Type	Comp. Length MM	Comp. Length Inch
71571	26	23	0	Male	562	22 2/16
71572	26	23	0	Male	892	35 2/16
71573	26	23	0	Male	560	22 1/16
71575	28	28	0	Male	800	31 8/16
71576	28	28	0	Male	807	31 12/16
71577	24	24	0	Male	599	23 9/16
71578	25	28-2	0	Female	564	22 3/16
71579	24	22	0	Male	607	23 14/16
71580	24	22	0	Male	880	34 10/16
71581	25	26	0	Male	613	24 2/16
71582	25	26	0	Male	947	37 5/16
71583	25	23	0	Male	637	25 1/16
71584	25	23	0	Male	930	36 10/16
71587	26	25	0	Male	587	23 2/16
71588	26	25	0	Male	909	35 13/16
71589	26	25	0	Male	583	22 15/16
71593	27	27	0	Male	660	26
71597	27	27	0	Male	597	23 8/16
71599	27	27	0	Male	587	23 2/16
71613	28	28-2	44	Female	554	21 13/16
71805	45	0	0	Bolt On	496	19 8/16
71875	33	0	0	Bolt On	505	19 14/16
71975	26	0	0	Bolt On	568	22 6/16
72009	33	27	50	Female	683	26 14/16
72011	33	27	50	Female	529	20 13/16
72023	26	0	47	Bolt On	662	26 1/16
72033	27	34	0	Female	580	22 13/16
72035	27	24	0	Male	607	23 14/16
72060	28	35	44	Male	667	26 4/16
72062	28	28-2	44	Female	524	20 10/16
72064	26	35	0	Male	690	27 3/16
72097	30	34	0	Female	527	20 12/16
72099	30	34	0	Male	643	25 5/16
72101	26	28	46	Male	557	21 15/16
72102	26	32	46	Female	488	19 3/16
72105	31	29	0	Female	530	20 14/16
72153	32	25	0	Male	672	26 7/16
72157	32	25	0	Male	1059	41 11/16
72159	32	29	0	Male	668	26 5/16
72161	32	29	0	Male	1056	41 9/16
72163	27	27	48	Male	801	31 9/16
72165	27	27	48	Male	812	31 15/16
72175	28	27	0	Male	963	37 15/16
72201	33	27	50	Female	697	27 7/16
72202	33	27	50	Female	536	21 2/16
72203	33	27	50	Female	698	27 8/16
72204	33	27	50	Female	537	21 2/16
72207	33	27	50	Female	698	27 8/16
72208	33	27	50	Female	537	21 2/16
72210	25	26-2	43	Female	603	23 12/16
72212	26	32	46	Female	520	20 8/16
72213	23	37	47	Female	627	24 11/16
72214	23	37	47	Female	502	19 12/16
72221	28	27	0	Male	638	25 2/16
72222	28	28	0	Female	585	23 1/16
72224	28	27	0	Male	957	37 11/16
72233	32	25	0	Male	681	26 13/16
72235	32	27	0	Female	602	23 11/16
72240	32	29	0	Male	680	26 12/16
72242	32	27	0	Female	587	23 2/16
72275	33	29	0	Female	565	22 4/16
72276	33	29	0	Female	536	21 2/16
72280	27	27	0	Male	800	31 8/16
72282	27	27	0	Male	814	32 1/16
72285	31	29	0	Female	530	20 14/16
72286	33	29	0	Female	601	23 11/16
72300	32	29	0	Male	645	25 6/16
72304	33	27	0	Male	693	27 5/16
72306	33	27	0	Male	1098	43 4/16
72308	27	27	54	NO IB	980	38 9/16
72339	30	34	0	Male	593	23 6/16
72341	30	34	0	Female	555	21 14/16
72354	33	39	0	Male	654.5	25 12/16
72360	32	25	0	Male	1082	42 10/16
72370	33	29	0	Female	604	23 12/16
72371	32	28	0	Female	565	22 4/16
72373	32	25	0	Male	649	25 9/16
72374	32	28	0	Female	584	23
72377	32	28	0	Female	524	20 10/16
72381	32	26	0	Male	627	24 11/16
72479	32	29	0	Male	550	21 10/16
72481	32	29	0	Female	550	21 10/16
72501	26	25	46	Male	625	24 10/16
72502	26	25	46	Male	990	39
72503	26	25	56	Male	625	24 10/16
72504	26	25	56	Male	990	39
72507	26	25	47	Male	589	23 3/16
72508	26	25	47	Male	960	37 13/16
72509	26	25	47	Male	618	24 5/16
72510	26	25	47	Male	990	39
72511	25	25	43	Male	626	24 10/16
72512	26	25	46	Male	983	38 11/16
72514	25	25	43	Male	974	38 6/16
72517	26	25	46	Male	595	23 7/16
72518	26	25	46	Male	950	37 6/16
72519	26	27	46	Male	590	23 4/16
72520	26	25	46	Male	950	37 6/16
72521	26	25	47	Male	638	25 2/16
72522	26	25	47	Male	1028	40 8/16
72523	26	25	47	Male	621	24 7/16
72524	26	25	47	Male	993	39 2/16
72528	26	25	47	Male	1032	40 10/16
72529	23	25	46	Male	940	37
72530	26	25	47	Male	998	39 5/16
72532	26	25	46	Male	945	37 3/16
72533	23	25	46	Male	585	23 1/16
72534	23	25	46	Male	940	37
72537	23	25	56	Male	585	23 1/16
72538	23	25	56	Male	940	37
72540	23	25	56	Male	940	37
72571	26	23	0	Male	588	23 2/16
72572	26	23	0	Male	960	37 13/16
72573	26	23	0	Male	607	23 14/16
72574	26	23	0	Male	938	36 15/16
72575	26	23	0	Male	608	23 15/16
72577	26	25	0	Male	690	27 3/16
72578	26	25	0	Male	1083	42 10/16
72580	26	25	0	Male	1082	42 10/16
72581	26	23	0	Male	624	24 9/16
72582	26	23	0	Male	980	38 9/16
72583	24	23	0	Male	639	25 3/16
72584	24	23	0	Male	833	32 13/16
72587	26	25	0	Male	571	22 8/16
72588	26	25	0	Male	954	37 9/16
72805	31	0	56	Bolt On	481	18 15/16
72875	31	0	0	Bolt On	523	20 9/16
72876	26	0	0	Bolt On	484.5	19 1/16
72979	36	0	0	Bolt On	626	24 10/16
73204	23	22	42	Female	600	23 10/16
73501	23	22	42	Male	574	22 10/16
73502	23	22	42	Male	893	35 3/16
73503	23	22	42	Male	618	24 5/16
73507	23	22	42	Male	690	27 3/16
73508	23	22	42	Male	778	30 10/16
73571	23	22	0	Male	635	25
73572	23	22	0	Male	815	32 1/16
73573	23	22	0	Male	681	26 13/16
73574	23	22	0	Male	772	30 6/16
73577	22	34	0	Male	574.5	22 10/16
73578	22	34	0	Male	928.5	36 9/16
73579	22	34	0	Male	616	24 4/16
74011	27	0	48	NO IB	592	23 5/16
74012	27	0	48	NO IB	1046	41 3/16
74013	27	0	48	NO IB	616	24 4/16

SPECIFICATIONS

Part #	IBJ Splines	OBJ Splines	ABS Count	IBJ Type	Comp. Length MM	Comp. Length Inch
74014	27	0	48	NO IB	1017	40 1/16
74017	27	0	54	NO IB	577	22 11/16
74018	27	0	54	NO IB	977	38 7/16
74272	27	29	0	Female	582	22 15/16
74278	27	29	0	Female	602	23 11/16
74372	29	29	0	Female	605	23 13/16
74571	27	27	0	Male	625.5	24 10/16
74671	29	29	0	Male	650	25 9/16
74673	29	29	0	Male	672	26 7/16
74677	27	27	0	Male	605	23 13/16
74975	27	0	0	Bolt On	733	28 14/16
74976	27	0	0	Bolt On	459	18 1/16
75103	36	0	0	Bolt On	803	31 10/16
75104	36	0	0	Bolt On	789	31 1/16
75105	32	0	0	Bolt On	475	18 11/16
75107	36	0	0	Bolt On	768	30 4/16
75111	38	0	0	Bolt On	613	24 2/16
75112	38	0	0	Bolt On	538	21 3/16
75113	38	0	0	Bolt On	548	21 9/16
75114	38	0	0	Bolt On	510	20 1/16
75194	36	26	0	Male	609	24
75301	36	0	0	Bolt On	487	19 3/16
75302	28	0	48	Bolt On	678	26 11/16
75309	36	26	0	Male	565	22 4/16
75310	36	26	0	Male	905	35 10/16
75321	36	26	0	Male	592	23 5/16
75356	36	0	0	Bolt On	795	31 5/16
75370	36	0	0	Bolt On	521	20 8/16
75372	36	26	0	Male	584	23
75547	30	0	0	Bolt On	520	20 8/16
75552	36	0	0	Bolt On	759	29 14/16
75554	36	0	0	Bolt On	546	21 8/16
75556	36	0	0	Bolt On	796	31 5/16
75569	36	0	0	Bolt On	512	20 3/16
75578	36	0	0	Bolt On	907	35 11/16
75771	36	26	0	Male	614	24 3/16
75772	36	26	0	Male	898	35 6/16
75773	36	26	0	Male	578	22 12/16
75774	36	26	0	Male	884	34 13/16
75805	22	0	0	Bolt On	590	23 4/16
75871	36	0	0	Bolt On	500	19 11/16
75872	36	0	0	Bolt On	768	30 4/16
75873	36	0	0	Bolt On	535	21 1/16
75875	26	0	0	Bolt On	712	28 1/16
75877	36	0	0	Bolt On	539	21 4/16
75878	36	0	0	Bolt On	810	31 14/16
75879	22	0	0	Bolt On	546	21 8/16
75880	22	0	0	Bolt On	778	30 10/16
75881	36	0	0	Bolt On	520	20 8/16
75882	36	0	0	Bolt On	810	31 14/16
75883	36	0	0	Bolt On	475	18 11/16
75884	36	0	0	Bolt On	748	29 7/16
75900	0	0	0	Bolt On	417	16 7/16
75905	38	0	48	Bolt On	520	20 8/16
75906	38	0	48	Bolt On	529	20 13/16
75970	36	0	0	Bolt On	558	21 15/16
75971	36	0	0	Bolt On	480	18 14/16
75972	36	0	0	Bolt On	483	19
75973	36	0	0	Bolt On	546	21 8/16
75974	36	0	0	Bolt On	810	31 14/16
75977	36	0	0	Bolt On	557	21 15/16
75978	36	0	0	Bolt On	826	32 8/16
75980	36	0	0	Bolt On	790	31 2/16
75981	22	0	0	Bolt On	559	22
75982	22	0	0	Bolt On	792	31 3/16
75983	22	0	0	Bolt On	536	21 2/16
75984	22	0	0	Bolt On	750	29 8/16
75987	22	0	0	Bolt On	768	30 4/16
75988	22	0	0	Bolt On	760	29 15/16
75989	22	0	0	Bolt On	526	20 11/16
75990	36	0	0	Bolt On	814	32 1/16
75991	22	0	0	Bolt On	540	21 4/16
75992	22	0	0	Bolt On	750	29 8/16
75993	36	0	0	Bolt On	521	20 8/16
75999	0	0	0	Bolt On	541	21 5/16
76078	35	34	48	Female	505	19 14/16
76080	27	0	0	Bolt On	635	25
76090	30	32	48	Male	792	31 3/16
76524	35	24	48	Male	508	20
76526	35	34	48	Female	487	19 3/16
76774	30	37	0	Male	661	26
76776	30	37	0	Male	997	39 4/16
76792	35	24	48	Male	527	20 12/16
76793	25	24	48	Male	563	22 3/16
76794	25	34	48	Female	538	21 3/16
76795	30	37	48	Male	631	24 13/16
76796	30	37	48	Male	962	37 14/16
77008	38	0	45	Bolt On	576.5	22 11/16
77057	38	0	0	Bolt On	549.5	21 10/16
77059	38	0	0	Bolt On	465.5	18 5/16
77103	38	0	45	Bolt On	537	21 2/16
77104	38	0	45	Bolt On	476	18 12/16
77107	38	0	45	Bolt On	530	20 14/16
77108	38	0	45	Bolt On	497	19 9/16
77111	38	0	45	Bolt On	602	23 11/16
77112	38	0	45	Bolt On	622	24 8/16
77113	36	0	0	Bolt On	467	18 6/16
77114	36	0	0	Bolt On	572	22 8/16
77117	36	26	0	Male	583	22 15/16
77118	36	26	0	Male	860	33 14/16
77125	38	0	45	Bolt On	543	21 6/16
77153	38	0	0	Bolt On	603	23 12/16
77155	38	0	0	Bolt On	524.5	20 10/16
77163	38	0	45	Bolt On	614	24 3/16
77246	38	0	45	Bolt On	628	24 12/16
77248	38	0	45	Bolt On	606	23 14/16
77261	38	0	0	Bolt On	558.5	22
77263	38	0	0	Bolt On	545	21 7/16
77281	38	0	45	Bolt On	472	18 9/16
77283	38	0	45	Bolt On	522	20 9/16
77285	38	0	0	Bolt On	614.5	24 3/16
77313	38	0	45	Bolt On	643	25 5/16
77331	38	0	0	Bolt On	562	22 2/16
77333	38	0	0	Bolt On	480	18 14/16
77347	38	0	0	Bolt On	537	21 2/16
77488	38	0	45	Bolt On	641	25 4/16
77500	38	0	45	Bolt On	617	24 5/16
77519	38	0	45	Bolt On	656	25 13/16
77521	38	0	45	Bolt On	654	25 12/16
77523	38	0	45	Bolt On	661	26
77525	38	0	45	Bolt On	525	20 11/16
77547	42	0	0	Bolt On	464	18 4/16
77801	26	0	45	Bolt On	694	27 5/16
77802	26	0	45	Bolt On	638	25 2/16
77803	26	0	96	Bolt On	694	27 5/16
77804	26	0	96	Bolt On	638	25 2/16
77805	33	0	45	Bolt On	596	23 7/16
77807	33	0	45	Bolt On	614	24 3/16
77808	33	0	45	Bolt On	636	25 1/16
77809	38	0	45	Bolt On	617	24 5/16
77810	38	0	45	Bolt On	640	25 3/16
77811	33	0	45	Bolt On	615	24 3/16
77812	33	0	0	Bolt On	638	25 2/16
77813	33	0	45	Bolt On	600	23 10/16
77814	33	0	45	Bolt On	617	24 5/16
77901	38	0	45	Bolt On	575	22 10/16
77902	38	0	45	Bolt On	482	19
77903	38	0	45	Bolt On	573	22 9/16
77904	38	0	45	Bolt On	490	19 5/16
77907	38	0	45	Bolt On	592	23 5/16
77908	38	0	45	Bolt On	611	24 1/16
77909	38	0	45	Bolt On	522	20 9/16
77911	38	0	45	Bolt On	612	24 2/16
77912	38	0	45	Bolt On	633	24 15/16

SPECIFICATIONS

Part #	IBJ Splines	OBJ Splines	ABS Count	IBJ Type	Comp. Length MM	Comp. Length Inch
77913	33	0	45	Bolt On	524	20 10/16
77914	33	0	45	Bolt On	498	19 10/16
77917	38	0	45	Bolt On	530	20 14/16
77918	38	0	45	Bolt On	503	19 13/16
77919	38	0	45	Bolt On	593	23 6/16
77920	38	0	45	Bolt On	613	24 2/16
77921	38	0	45	Bolt On	527	20 12/16
77922	38	0	45	Bolt On	502	19 12/16
77923	38	0	45	Bolt On	602	23 11/16
77924	38	0	45	Bolt On	620	24 7/16
77927	38	0	45	Bolt On	550	21 10/16
77928	38	0	45	Bolt On	525	20 11/16
77929	38	0	45	Bolt On	565	22 4/16
77930	38	0	45	Bolt On	488	19 3/16
77931	38	0	45	Bolt On	561	22 1/16
77972	36	0	0	Bolt On	617	24 5/16
77973	36	0	0	Bolt On	518	20 6/16
77974	36	0	0	Bolt On	653	25 11/16
78084	30	27	0	Male	537	21 2/16
78086	30	27	0	Male	1022	40 4/16
78096	26	33	0	Male	593	23 6/16
78098	26	33	0	Male	925	36 7/16
78100	26	33	0	Male	625	24 10/16
78102	27	0	48	Bolt On	662	26 1/16
78103	30	27	48	Male	570	22 7/16
78104	30	27	48	Male	891	35 1/16
78105	27	0	48	Bolt On	590	23 4/16
78106	30	0	0	Bolt On	625	24 10/16
78107	30	0	0	Bolt On	611	24 1/16
78108	30	0	0	Bolt On	660	26
78111	30	27	0	Male	581	22 14/16
78112	30	27	0	Male	899	35 6/16
78113	30	0	48	Bolt On	611	24 1/16
78114	30	0	48	Bolt On	666	26 4/16
78115	30	0	0	Bolt On	613	24 2/16
78117	30	27	48	Male	611	24 1/16
78118	30	27	48	Male	925	36 7/16
78121	30	27	0	Male	599	23 9/16
78122	30	27	0	Male	916	36 1/16
78199	26	23	0	Male	616	24 4/16
78200	26	23	0	Male	893	35 3/16
78202	26	22	0	Male	887	34 15/16
78203	26	34	0	Male	591	23 4/16
78204	26	34	0	Male	916	36 1/16
78311	26	26	0	Male	601	23 11/16
78330	26	34	0	Male	590	23 4/16
78332	26	34	0	Male	918	36 2/16
78467	26	22	0	Male	620	24 7/16
78571	30	27	0	Male	585	23 1/16
78572	30	27	0	Male	970	38 3/16
78580	30	0	48	Bolt On	624	24 9/16
78901	27	0	48	Bolt On	615	24 3/16
78902	27	0	48	Bolt On	673	26 8/16
78903	30	0	48	Bolt On	608	23 15/16
78904	30	0	48	Bolt On	650	25 9/16
78905	27	0	48	Bolt On	613	24 2/16
78906	27	0	48	Bolt On	575	22 10/16
78915	30	0	48	Bolt On	600	23 10/16
78975	30	0	0	Bolt On	617	24 5/16
79031	36	26	0	Male	540	21 4/16
79033	36	26	-	Male	948	37 5/16
79041	36	26	48	Male	1009	39 12/16
79074	29	26	44	Male	704	27 11/16
79079	26	26	43	Male	598	23 9/16
79081	26	26	43	Male	952	37 8/16
79083	36	26	48	Male	956	37 10/16
79084	36	26	48	Male	527	20 12/16
79085	36	26	48	Male	556	21 14/16
79249	36	26	0	Male	520	20 8/16
79269	36	26	48	Male	506	19 15/16
79271	26	26	48	Male	1031	40 9/16
79342	40	31	0	Male	524.5	20 10/16
79343	40	31	0	Male	999	39 5/16
79564	40	28	48	Male	557	21 15/16
79566	36	26	0	Male	970	38 3/16
79569	40	28	48	Male	1025	40 6/16
79571	40	28	48	Male	1025	40 6/16
79711	26	26	43	Male	585	23 1/16
79712	26	26	43	Male	936	36 14/16
79713	36	26	48	Male	526	20 11/16
79714	36	26	48	Male	971	38 4/16
79717	36	26	48	Male	541	21 5/16
79718	36	26	48	Male	974	38 6/16
79721	36	26	48	Male	552	21 12/16
79722	36	26	48	Male	992	39 1/16
79723	36	26	48	Male	520	20 8/16
79724	36	26	48	Male	968	38 2/16
79727	36	26	48	Male	523	20 9/16
79728	36	26	48	Male	978	38 8/16
79729	36	26	48	Male	969	38 2/16
79730	36	26	48	Male	1002	39 7/16
79731	26	26	48	Male	576	22 11/16
79732	26	26	48	Male	1030	40 9/16
79734	26	26	48	Male	1028	40 8/16
79737	36	34	48	Female	430	16 15/16
79738	36	39	48	Male	662	26 1/16
79740	36	39	48	Male	662	26 1/16
80051	25	0	46	NO IB	568	22 6/16
80052	25	0	46	NO IB	624	24 9/16
80060	33	27	29	Male	621	24 7/16
80068	30	27	29	Male	613	24 2/16
80082	30	27	0	Male	602	23 11/16
80180	26	0	46	NO IB	496	19 8/16
80311	33	0	29	NO IB	498	19 10/16
80313	33	0	29	NO IB	600	23 10/16
80315	26	0	46	NO IB	499	19 10/16
80369	33	34	29	Male	597	23 8/16
85103	25	26	0	Male	558	21 15/16
85105	25	26	0	Male	858	33 12/16
86201	33	34	47	Female	490	19 5/16
86202	33	34	47	Female	473	18 10/16
86205	33	34	47	Female	519	20 7/16
86502	33	34	47	Male	911	35 14/16
86503	33	34	47	Male	620.5	24 7/16
86504	33	34	47	Male	971	38 4/16
86507	33	34	47	Male	594	23 6/16
86508	33	34	47	Male	951	37 7/16
87101	31	28	54	Male	709	27 15/16
87102	31	28-2	54	Female	651	25 10/16
87103	25	25	48	Male	637	25 1/16
87104	25	25	48	Male	927	36 8/16
87106	30	28	52	Male	975	38 6/16
87107	25	25	48	Male	640	25 3/16
87108	25	25	48	Male	924	36 6/16
87110	27	28-2	47	Female	610	24
87187	25	25	44	Male	932	36 11/16
87202	27	26	47	Female	622	24 8/16
87273	28	30	0	Male	636	25 1/16
87275	28	28-2	0	Female	567	22 5/16
87302	26	28-2	44	Female	622	24 8/16
87372	26	28-2	0	Female	618	24 5/16
87501	27	27	47	Male	661	26
87503	25	25	44	Male	644	25 6/16
87504	25	25	44	Male	936	36 14/16
87507	25	25	44	Male	650	25 9/16
87511	25	27	44	Male	642	25 4/16
87512	25	27	44	Male	927	36 8/16
87601	27	28	47	Male	652	25 11/16
87603	24	24	44	Male	613	24 2/16
87604	24	24	44	Male	884	34 13/16
87607	24	26	44	Male	605	23 13/16
87608	24	26	44	Male	888	34 15/16
87609	28	28	46	Male	616	24 4/16
87611	28	24	46	Male	624	24 9/16

SPECIFICATIONS

Part #	IBJ Splines	OBJ Splines	ABS Count	IBJ Type	Comp. Length MM	Comp. Length Inch
87612	28	28-2	46	Female	620	24 7/16
87613	26	24	44	Male	626	24 10/16
87614	26	28-2	44	Female	626	24 10/16
87615	26	28	44	Male	616	24 4/16
87617	28	28	54	Male	673	26 8/16
87618	28	28-2	54	Female	667	26 4/16
87682	26	24	0	Male	889	35
87683	26	26-2	0	Female	611	24 1/16
87684	26	26	0	Male	582	22 15/16
87687	26	26-2	0	Female	512	20 3/16
87688	26	26	0	Male	579	22 13/16
88012	30	28-2	52	Female	611	24 1/16
88098	27	25	48	Male	803	31 10/16
88101	25	25	44	Male	627	24 11/16
88102	25	25	44	Male	914	36
88103	25	25	44	Male	629	24 12/16
88104	25	25	44	Male	908	35 12/16
88107	27	27	52	Male	652	25 11/16
88108	27	26-2	52	Female	605	23 13/16
88109	27	27	52	Male	647	25 8/16
88114	27	27	52	Male	970	38 3/16
88117	27	27	52	Male	666	26 4/16
88118	27	27	52	Male	953	37 8/16
88201	25	26-2	47	Female	593	23 6/16
88202	27	27	52	Male	652	25 11/16
88204	27	28-2	47	Female	608	23 15/16
88208	27	28-2	52	Female	595	23 7/16
88214	27	26	47	Female	620	24 7/16
88219	25	26-2	47	Female	594	23 6/16
88257	27	26	44	Male	581	22 14/16
88259	27	27	47	Male	984	38 12/16
88261	27	29	44	Male	631	24 13/16
88271	25	26-2	0	Female	573	22 9/16
88295	30	28	52	Male	670	26 6/16
88322	27	26-2	52	Female	610	24
88348	25	25	48	Male	639	25 3/16
88415	27	27	46	Male	671	26 7/16
88417	27	27	46	Male	941	37 1/16
88420	30	28	52	Male	661	26
88422	30	28-2	52	Female	599	23 9/16
88427	27	27	46	Male	675	26 9/16
88432	25	25	48	Male	639	25 3/16
88434	25	25	48	Male	923.5	36 6/16
88438	25	25	48	Male	925	36 7/16
88456	30	31	52	Male	667	26 4/16
88501	25	25	44	Male	625	24 10/16
88502	25	25	44	Male	913	35 15/16
88503	25	25	44	Male	626	24 10/16
88504	25	25	29	Male	908	35 12/16
88507	25	25	29	Male	613	24 2/16
88509	25	25	44	Male	660	26
88510	25	25	44	Male	940	37
88511	25	25	44	Male	652	25 11/16
88512	25	25	44	Male	936	36 14/16
88513	27	27	47	Male	660	26
88514	27	27	47	Male	974	38 6/16
88517	25	25	47	Male	975	38 6/16
88518	25	25	47	Male	632	24 14/16
88519	25	25	44	Male	982	38 11/16
88520	25	27	47	Male	651	25 10/16
88522	25	25	47	Male	631	24 13/16
88523	27	28	47	Male	655	25 13/16
88527	27	28	52	Male	650	25 9/16
88528	27	28-2	52	Female	602	23 11/16
88533	25	25	29	Male	643	25 5/16
88534	25	25	29	Male	924	36 6/16
88536	27	27	44	Male	650	25 9/16
88561	30	27	52	Male	670	26 6/16
88571	25	25	0	Male	955	37 10/16
88572	25	25	0	Male	597	23 8/16
88574	25	25	44	Male	610	24
88578	25	25	0	Male	892	35 2/16
88581	25	25	0	Male	964	37 15/16
88631	30	28-2	48	Female	590	23 4/16
88633	30	28	48	Male	665	26 3/16
88635	30	28	48	Male	970	38 3/16
88637	30	28-2	48	Female	670	26 6/16
89059	25	27	43	Male	668	26 5/16
89061	25	27	43	Male	994	39 2/16
89101	28	25	0	Male	591	23 4/16
89102	28	0	0	Bolt On	510	20 1/16
89103	27	27	48	Male	669	26 5/16
89104	27	27	48	Male	940	37
89107	28	28	0	Male	591	23 4/16
89108	27	26-2	48	Female	610	24
89110	27	27	48	Male	955	37 10/16
89111	27	27	48	Male	664	26 2/16
89112	27	26-2	48	Female	600	23 10/16
89113	27	27	43	Male	652	25 11/16
89114	27	28-2	43	Female	613	24 2/16
89117	25	25	43	Male	616	24 4/16
89118	25	25	43	Male	940	37
89119	25	27	43	Male	616	24 4/16
89120	25	28-2	43	Female	661	26
89121	25	26-2	43	Female	566	22 5/16
89122	25	26-2	43	Female	662	26 1/16
89123	25	25	43	Male	737	29
89124	25	25	43	Male	828	32 10/16
89127	25	27	43	Male	632	24 14/16
89128	25	28-2	43	Female	679	26 12/16
89131	30	28	50	Male	596	23 7/16
89133	30	0	50	Bolt On	531	20 14/16
89201	27	26-2	47	Female	624	24 9/16
89203	27	26-2	47	Female	623	24 8/16
89204	27	27	47	Male	646	25 7/16
89207	25	26-2	43	Female	564	22 3/16
89208	25	26-2	43	Female	602	23 11/16
89273	27	26-2	47	Female	611	24 1/16
89301	27	26-2	43	Female	560	22 1/16
89302	27	26-2	43	Female	632	24 14/16
89352	27	27	43	Male	669	26 5/16
89365	27	27	43	Male	991	39
89501	25	25	43	Male	945	37 3/16
89502	25	25	43	Male	622	24 8/16
89504	27	27	47	Male	644	25 6/16
89508	27	25	47	Male	648	25 8/16
89509	25	27	43	Male	637	25 1/16
89510	27	25	47	Male	657	25 14/16
89511	25	27	43	Male	652	25 11/16
89512	25	27	43	Male	959	37 12/16
89514	25	25	43	Male	626	24 10/16
89518	25	25	43	Male	647	25 8/16
89519	25	27	43	Male	968	38 2/16
89520	25	27	43	Male	630	24 13/16
89521	25	27	43	Male	955	37 10/16
89522	25	27	43	Male	642	25 4/16
89527	25	25	44	Male	644	25 6/16
89528	25	25	44	Male	926	36 7/16
89529	27	28	43	Male	662	26 1/16
89530	27	28-2	43	Female	631	24 13/16
89569	28	30	0	Male	637	25 1/16
89571	25	25	0	Male	928	36 9/16
89572	25	25	0	Male	610	24
89573	25	25	0	Male	924.5	36 6/16
89574	25	25	0	Male	600	23 10/16
89578	25	25	0	Male	590	23 4/16
89579	25	25	0	Male	931	36 10/16
89580	25	25	0	Male	592	23 5/16
89581	25	25	0	Male	950	37 6/16
89582	25	25	0	Male	611	24 1/16
89583	25	25	0	Male	896.5	35 5/16
89584	27	27	0	Male	660	26
89587	27	25	0	Male	632	24 14/16
89601	25	25	43	Male	957	37 11/16

SPECIFICATIONS

Part #	IBJ Splines	OBJ Splines	ABS Count	IBJ Type	Comp. Length MM	Comp. Length Inch
89602	25	25	43	Male	642	25 4/16
89603	25	25	43	Male	611	24 1/16
89604	25	25	43	Male	936	36 14/16
89605	27	28	43	Male	674	26 9/16
89606	27	28-2	43	Female	638	25 2/16
89607	27	26-2	43	Female	617	24 5/16
89608	27	26-2	43	Female	698	27 8/16
89671	25	25	0	Male	622	24 8/16
89672	25	25	0	Male	936	36 14/16
89673	28	28	0	Male	608	23 15/16
89674	28	0	0	Bolt On	537	21 2/16
90015	30	24	48	Male	979	38 9/16
90024	26	23	48	Male	650	25 9/16
90026	26	23	48	Male	1025	40 6/16
90089	30	0	48	Bolt On	685	26 15/16
90091	30	0	48	Bolt On	640	25 3/16
90100	26	0	48	Bolt On	695	27 6/16
90101	30	24	48	Male	648	25 8/16
90102	30	24	48	Male	965	38
90103	30	23	48	Male	620	24 7/16
90104	30	23	48	Male	994	39 2/16
90105	26	23	48	Male	757	29 13/16
90107	26	20	48	Male	640	25 3/16
90108	26	20	48	Male	926	36 7/16
90109	26	20	0	Male	613	24 2/16
90111	26	23	48	Male	646	25 7/16
90113	26	20	48	Male	643	25 5/16
90114	26	20	48	Male	900	35 7/16
90115	30	24	48	Male	656	25 13/16
90117	26	23	48	Male	620	24 7/16
90118	26	23	48	Male	1002	39 7/16
90119	30	0	48	Bolt On	554	21 13/16
90120	30	0	48	Bolt On	578	22 12/16
90121	26	24	48	Male	669	26 5/16
90122	26	24	48	Male	968	38 2/16
90135	26	20	48	Male	658	25 14/16
90137	26	20	48	Male	918	36 2/16
90143	26	24	48	Male	654	25 12/16
90155	30	24	48	Male	993	39 2/16
90159	26	24	48	Male	980	38 9/16
90190	26	24	48	Male	612	24 2/16
90228	26	24	0	Male	644	25 6/16
90230	26	24	0	Male	640	25 3/16
90232	26	24	0	Male	954	37 9/16
90244	26	24	0	Male	660	26
90246	26	24	0	Male	976	38 7/16
90265	30	24	48	Male	662	26 1/16
90277	36	34	0	Male	705	27 12/16
90279	26	24	0	Male	624	24 9/16
90281	26	24	0	Male	973	38 5/16
90305	36	34	0	Male	683	26 14/16
90307	26	23	0	Male	896	35 4/16
90309	26	23	0	Male	654	25 12/16
90317	26	24	0	Male	989	38 15/16
90324	26	20	0	Male	637	25 1/16
90326	26	20	0	Male	908	35 12/16
90360	27	24	48	Male	942	37 1/16
90362	26	24	48	Male	625	24 10/16
90363	26	23	48	Male	807	31 12/16
90365	30	24	48	Male	950	37 6/16
90367	26	0	48	Bolt On	785	30 14/16
90405	26	0	0	Bolt On	678	26 11/16
90451	30	24	48	Male	673	26 8/16
90453	26	20	0	Male	811	31 15/16
90497	26	0	48	Bolt On	632	24 14/16
90501	26	23	48	Male	605.4	23 13/16
90502	26	23	48	Male	924	36 6/16
90565	30	24	48	Male	993	39 2/16
90567	30	24	48	Male	675	26 9/16
90569	30	23	0	Male	592	23 5/16
90571	26	23	0	Male	596	23 7/16
90572	26	23	0	Male	910	35 13/16

Part #	IBJ Splines	OBJ Splines	ABS Count	IBJ Type	Comp. Length MM	Comp. Length Inch
90601	30	24	48	Male	652	25 11/16
90602	30	24	48	Male	949	37 6/16
90603	26	23	48	Male	638	25 2/16
90604	26	23	48	Male	995	39 3/16
90607	24	23	48	Male	640	25 3/16
90608	24	23	48	Male	881	34 11/16
90609	26	24	48	Male	626	24 10/16
90610	26	24	48	Male	948	37 5/16
90611	30	24	48	Male	652	25 11/16
90612	30	24	48	Male	967	38 1/16
90613	26	23	48	Male	574	22 10/16
90614	26	23	48	Male	580	22 13/16
90617	26	24	48	Male	663	26 2/16
90618	26	24	48	Male	960	37 13/16
90619	26	20	48	Male	678	26 11/16
90620	26	20	48	Male	934	36 12/16
90622	30	24	48	Male	941	37 1/16
90623	26	20	48	Male	627	24 11/16
90624	26	20	48	Male	907	35 11/16
90627	26	20	48	Male	635	25
90628	26	20	48	Male	915	36
90629	26	20	48	Male	640	25 3/16
90630	26	20	48	Male	930	36 10/16
90631	26	20	48	Male	642	25 4/16
90632	26	20	48	Male	925	36 7/16
90633	26	23	48	Male	625	24 10/16
90634	26	23	48	Male	941	37 1/16
90637	26	20	48	Male	627	24 11/16
90638	26	20	48	Male	910	35 13/16
90639	26	23	48	Male	638	25 2/16
90640	26	23	48	Male	914	36
90641	26	20	48	Male	638	25 2/16
90642	26	20	48	Male	918	36 2/16
90643	26	23	48	Male	624	24 9/16
90644	26	23	48	Male	855	33 11/16
90647	26	24	48	Male	662	26 1/16
90648	26	24	48	Male	961	37 13/16
90649	26	23	48	Male	595	23 7/16
90650	26	23	48	Male	988	38 14/16
90651	26	20	48	Male	617	24 5/16
90652	26	20	48	Male	913	35 15/16
90653	26	24	48	Male	617	24 5/16
90654	26	24	48	Male	921	36 4/16
90657	30	24	48	Male	706	27 13/16
90658	30	24	48	Male	1028	40 8/16
90659	30	23	48	Male	681	26 13/16
90660	30	23	48	Male	1058	41 10/16
90671	26	20	0	Male	630	24 13/16
90674	26	20	0	Male	935	36 13/16
90675	30	30	0	Male	647	25 8/16
90676	30	27	0	Male	620	24 7/16
90677	23	20	0	Male	778	30 10/16
90678	23	20	0	Male	680	26 12/16
90679	26	24	48	Male	975	38 6/16
90685	30	30	0	Male	708	27 14/16
90686	30	27	0	Male	711	28
90801	26	0	0	Bolt On	504	19 13/16
90802	26	0	0	Bolt On	783	30 13/16
90803	26	0	0	Bolt On	788	31
90875	26	0	0	Bolt On	544	21 7/16
90876	26	0	0	Bolt On	619	24 6/16
90885	26	0	0	Bolt On	536	21 2/16
90886	26	27	0	Male	613	24 2/16
90895	26	0	48	Bolt On	558.5	22
90900	26	0	48	Bolt On	508	20
90905	30	0	48	Bolt On	564	22 3/16
90910	30	0	48	Bolt On	555.6	21 14/16
90995	0	0	0	Bolt On	408	16 1/16
91008	30	27	0	Male	678	26 11/16
91106	30	29	0	Male	672	26 7/16
91108	30	29-2	0	Male	632	24 14/16
91110	30	29	0	Male	731	28 12/16

SPECIFICATIONS

Part #	IBJ Splines	OBJ Splines	ABS Count	IBJ Type	Comp. Length MM	Comp. Length Inch
91112	30	29	0	Male	1033	40 11/16
91143	26	25	50	Male	588.5	23 3/16
91145	26	27-2	50	Female	530	20 14/16
91149	26	25	0	Male	890	35 1/16
91152	28	27	0	Male	635	25
91175	30	27-2	0	Female	617.5	24 5/16
91201	28	27	50	Female	584	23
91203	28	27-2	50	Female	602	23 11/16
91207	28	27-2	50	Female	613	24 2/16
91209	28	27-2	50	Female	569	22 6/16
91212	28	29	50	Female	650	25 9/16
91214	30	29	0	Male	721	28 6/16
91227	26	25	0	Male	618	24 5/16
91229	26	25	0	Male	917	36 2/16
91231	28	27	50	Female	576	22 11/16
91237	28	27-2	0	Female	594	23 6/16
91252	26	27-2	0	Female	536	21 2/16
91272	28	27-2	0	Female	618	24 5/16
91274	28	27-2	0	Female	630	24 13/16
91278	28	27-2	0	Female	575	22 10/16
91298	17	0	0	NO IB	439	17 5/16
91339	30	29	0	Male	975	38 6/16
91341	28	27-2	0	Female	578	22 12/16
91343	28	29	0	Male	632.5	24 14/16
91349	26	27	0	Male	613	24 2/16
91351	26	27	0	Male	899	35 6/16
91353	30	25	0	Male	927	36 8/16
91355	30	25	0	Male	607	23 14/16
91370	30	27	0	Female	580	22 13/16
91371	26	27	0	Female	584	23
91373	30	29	0	Male	692	27 4/16
91392	26	27	0	Male	611	24 1/16
91411	23	23	50	Male	792	31 3/16
91413	23	23	50	Male	739	29 2/16
91462	26	25	0	Male	642	25 4/16
91464	26	25	0	Male	895	35 4/16
91466	23	23	0	Male	800	31 8/16
91468	23	23	0	Male	743	29 4/16
91472	28	27-2	0	Female	612	24 2/16
91501	28	29	50	Male	675	26 9/16
91502	28	27	50	Male	659	25 15/16
91503	28	27	50	Male	980	38 9/16
91504	28	27	50	Male	619	24 6/16
91507	28	27	50	Male	619	24 6/16
91509	28	29	50	Male	633	24 15/16
91510	28	27	50	Male	644	25 6/16
91511	26	25	50	Male	903	35 9/16
91513	28	27	50	Male	597	23 8/16
91514	28	29-2	0	Female	613	24 2/16
91517	28	27	50	Male	1005	39 9/16
91518	28	27	50	Male	635	25
91519	28	27	50	Male	650	25 9/16
91520	28	27	50	Male	634	24 15/16
91521	26	25	50	Male	895	35 4/16
91522	26	25	50	Male	609	24
91523	28	27	50	Male	956	37 10/16
91524	28	27	50	Male	595	23 7/16
91527	26	25	50	Male	903	35 9/16
91528	26	25	50	Male	612	24 2/16
91529	26	25	50	Male	906	35 11/16
91530	26	25	50	Male	623.5	24 9/16
91532	28	27	50	Male	629	24 12/16
91533	28	27	50	Male	989	38 15/16
91534	28	27	50	Male	628	24 12/16
91537	28	29	50	Male	730	28 12/16
91538	28	27	50	Male	613	24 2/16
91539	28	29	50	Male	705	27 12/16
91540	28	27	50	Male	640	25 3/16
91551	30	29	50	Female	659	25 15/16
91571	28	29	0	Male	676	26 10/16
91573	26	27	0	Male	661	26
91574	26	27	0	Male	961	37 13/16
91577	28	27	0	Male	663	26 2/16
91579	26	27	0	Male	926	36 7/16
91580	26	27	0	Male	621	24 7/16
91581	26	27	0	Male	923.5	36 6/16
91583	26	27	0	Male	897	35 5/16
91584	26	27	0	Male	604	23 12/16
91587	26	27	0	Male	902	35 8/16
91589	24	25	0	Male	892	35 2/16
91590	24	25	0	Male	608	23 15/16
91591	24	25	0	Male	898	35 6/16
91593	24	25	0	Male	888	34 15/16
91597	23	25	0	Male	878	34 9/16
91598	23	25	0	Male	600	23 10/16
91601	30	27	0	Male	667	26 4/16
91602	30	27	0	Female	562	22 2/16
91671	26	25	0	Male	903	35 9/16
91672	26	25	0	Male	599	23 9/16
91673	23	25	0	Male	909	35 13/16
91674	23	25	0	Male	602	23 11/16
91677	23	25	0	Male	880	34 10/16
91678	23	25	0	Male	583	22 15/16
91679	23	25	0	Male	868	34 3/16
91680	23	25	0	Male	569	22 6/16
91681	26	27	0	Male	576	22 11/16
91682	26	27	0	Male	576	22 11/16
91683	26	27	0	Male	615	24 3/16
91684	26	27	0	Male	619.5	24 6/16
91687	26	27	0	Male	924	36 6/16
91688	26	27	0	Male	620	24 7/16
91689	26	27	0	Male	922	36 5/16
91691	24	25	0	Male	914	36
91692	24	25	0	Male	624	24 9/16
91693	24	25	0	Male	916	36 1/16
91694	30	29	50	Male	711	28
91696	30	29	0	Male	687	27 1/16
91697	28	27	0	Male	678	26 11/16
91771	26	27	50	Male	605	23 13/16
91772	26	27	0	Male	597	23 8/16
92100	27	25	0	Male	776	30 9/16
92101	24	25	0	Male	780	30 11/16
92105	23	23	0	Female	517	20 6/16
92106	27	25	44	Female	695	27 6/16
92172	27	23	44	Female	682	26 14/16
92200	27	25	44	Female	683	26 14/16
92275	30	23	0	Female	651	25 10/16
92276	27	25	0	Female	682	26 14/16
92281	27	25	0	Male	795	31 5/16
92285	27	23	0	Female	686	27
92286	27	23	0	Female	560	22 1/16
92296	27	25	0	Male	818	32 3/16
92322	27	25	44	Male	779	30 11/16
92370	30	23	0	Female	619	24 6/16
92505	27	25	44	Male	780	30 11/16
92575	24	22	0	Male	762	30
92671	24	25	0	Male	762	30
92672	24	25	0	Male	770	30 5/16
92775	30	25	0	Female	693	27 5/16
92776	30	23	0	Female	693	27 5/16
92954	25	25	44	Male	754	29 11/16
92956	25	25	44	Male	763	30 1/16
93056	29	27	0	Male	971	38 4/16
93058	29	27	0	Male	667	26 4/16
93078	29	26	44	Male	1052	41 7/16
93101	29	0	0	Bolt On	606	23 14/16
93102	29	0	0	Bolt On	630	24 13/16
93110	29	31/29	44	Male	648	25 8/16
93111	27	25	0	Male	628	24 12/16
93112	27	0	0	Bolt On	684	26 15/16
93113	27	0	0	Bolt On	678	26 11/16
93114	29	31	46	Male	647	25 8/16
93117	29	29	44	Male	646	25 7/16
93118	29	29	44	Male	978	38 8/16

SPECIFICATIONS

Part #	IBJ Splines	OBJ Splines	ABS Count	IBJ Type	Comp. Length MM	Comp. Length Inch
93119	25	25	42	Male	633	24 15/16
93120	25	25	42	Male	934	36 12/16
93131	25	25	42	Male	620	24 7/16
93141	32	29	0	Male	1033	40 11/16
93144	29	27	0	Male	668	26 5/16
93146	29	27	0	Male	970	38 3/16
93184	29	0	0	Bolt On	646	25 7/16
93250	29	24	0	Male	646	25 7/16
93252	29	24	0	Male	982	38 11/16
93274	27	25	42	Male	954	37 9/16
93307	29	26	0	Male	940	37
93309	32	29	0	Male	994	39 2/16
93311	32	29	0	Male	636	25 1/16
93326	32	29	0	Male	658	25 14/16
93345	25	25	0	Male	647	25 8/16
93347	25	25	0	Male	911	35 14/16
93350	25	26	0	Male	913	35 15/16
93370	29	27	-	Male	681	26 13/16
93372	29	26	-	Male	940	37
93377	25	26	0	Male	647	25 8/16
93422	25	25	42	Male	936	36 14/16
93434	25	25	0	Male	641.5	25 4/16
93436	25	25	0	Male	919.5	36 3/16
93447	29	29	0	Male	988	38 14/16
93449	29	29	44	Male	985	38 12/16
93450	32	29	0	Male	1026	40 6/16
93451	27	25	0	Male	592	23 5/16
93452	32	29	0	Male	670	26 6/16
93488	32	29	0	Male	1014	39 15/16
93501	29	29	44	Male	633	24 15/16
93502	29	29	44	Male	968	38 2/16
93503	29	29	44	Male	640	25 3/16
93507	29	29	46	Male	635	25
93508	29	29	46	Male	970	38 3/16
93509	29	31	44	Male	640	25 3/16
93511	29	29	44	Male	960	37 13/16
93601	32	29	50	Male	680	26 12/16
93602	32	29	50	Male	1030	40 9/16
93603	29	26	44	Male	624	24 9/16
93604	29	26	44	Male	977	38 7/16
93607	27	27	44	Male	951	37 7/16
93608	27	27	44	Male	638	25 2/16
93609	29	29	44	Male	619	24 6/16
93610	29	29	44	Male	1002	39 7/16
93611	27	29	44	Male	651	25 10/16
93612	27	29	44	Male	980	38 9/16
93613	27	29	44	Male	620	24 7/16
93614	27	29	44	Male	1008	39 11/16
93617	27	29	44	Male	630	24 13/16
93618	27	29	44	Male	949	37 6/16
93619	27	29	44	Male	613	24 2/16
93620	27	29	44	Male	933	36 12/16
93621	27	31	44	Male	620	24 7/16
93622	29	31	46	Male	622	24 8/16
93623	27	27	44	Male	618	24 5/16
93624	27	27	44	Male	930	36 10/16
93625	25	25	42	Male	602	23 11/16
93626	25	25	42	Male	934	36 12/16
93627	27	31/27	44	Male	632	24 14/16
93628	27	27	44	Male	919	36 3/16
93629	29	29	44	Male	613	24 2/16
93630	29	29	44	Male	996	39 3/16
93631	29	29	46	Male	614	24 3/16
93632	29	29	46	Male	962	37 14/16
93633	29	29	46	Male	635	25
93634	29	29	46	Male	955	37 10/16
93635	29	31	46	Male	630	24 13/16
93637	27	27	46	Male	624	24 9/16
93638	27	27	46	Male	966	38 1/16
93639	25	25	42	Male	615	24 3/16
93640	25	25	42	Male	922	36 5/16
93642	25	25	42	Male	930	36 10/16
93644	25	25	42	Male	922	36 5/16
93647	27	29	42	Male	614	24 3/16
93648	27	29	44	Male	928	36 9/16
93649	27	29	42	Male	586	23 1/16
93650	27	29	42	Male	955	37 10/16
93651	27	31/27	46	Male	628	24 12/16
93652	27	27	46	Male	919	36 3/16
93653	29	27	0	Male	635	25
93660	25	26	0	Male	656	25 13/16
93662	25	26	0	Male	903	35 9/16
93705	29	27	0	Male	933	36 12/16
93707	29	29	46	Male	640	25 3/16
93723	29	29	0	Male	646	25 7/16
93751	25	25	42	Male	632	24 14/16
93752	25	25	42	Male	913	35 15/16
93753	25	25	42	Male	622	24 8/16
93771	25	24	0	Male	623	24 8/16
93772	25	24	42	Male	914	36
93773	27	27	46	Male	597	23 8/16
93777	25	24	0	Male	627	24 11/16
93778	25	24	0	Male	890	35 1/16
93781	24	24	0	Male	601	23 11/16
93782	24	24	0	Male	884	34 13/16
93787	29	29	46	Male	668	26 5/16
93788	29	30	46	Female	573	22 9/16
93789	29	29	0	Male	1012	39 13/16
93791	29	29	0	Male	725	28 9/16
93792	29	29	0	Male	1054	41 8/16
93871	27	0	0	Bolt On	553.5	21 13/16
93872	27	0	0	Bolt On	711	28
93875	28	0	0	Bolt On	521	20 8/16
93876	29	0	0	Bolt On	578	22 12/16
93880	28	0	0	Bolt On	566	22 5/16
93881	29	0	0	Bolt On	603	23 12/16
93882	29	0	0	Bolt On	658	25 14/16
93883	29	0	0	Bolt On	646	25 7/16
93885	29	0	0	Bolt On	496	19 8/16
93886	25	0	0	Bolt On	535	21 1/16
93895	28	0	0	Bolt On	526	20 11/16
93896	27	0	0	Bolt On	521	20 8/16
94211	30	29-2	0	Female	560	22 1/16
94212	30	29	0	Male	635	25
94213	30	29	0	Male	702	27 10/16
94411	28	31-2	50	Female	672	26 7/16
94414	26	27-2	50	Female	572	22 8/16
94418	28	27-2	50	Female	578	22 12/16
94420	28	27	50	Female	597	23 8/16
94422	28	29	50	Female	607	23 14/16
94424	30	29	50	Female	680	26 12/16
94428	28	29-2	50	Female	663	26 2/16
94430	30	31-2	0	Female	695	27 6/16
94432	30	31-2	0	Female	719	28 5/16
94474	28	27-2	0	Female	551	21 11/16
94479	30	29-2	0	Female	633	24 15/16
94501	26	27-2	50	Female	566	22 5/16
94502	26	27	50	Male	596	23 7/16
94503	26	27	50	Male	591	23 4/16
94507	30	31	50	Female	671	26 7/16
94508	30	31	50	Male	642	25 4/16
94509	28	29	50	Male	644	25 6/16
94510	28	29	50	Male	646	25 7/16
94512	28	31	50	Male	641	25 4/16
94513	26	27	50	Male	615	24 3/16
94517	28	27	50	Male	622	24 8/16
94519	28	27	50	Male	638	25 2/16
94521	28	29	50	Male	641	25 4/16
94523	30	29	50	Male	710	27 15/16
94527	28	29	50	Male	712	28 1/16
94571	26	27	0	Male	587	23 2/16
94572	26	27	0	Male	585	23 1/16
94573	28	27	0	Male	655	25 13/16
95101	27	25	44	Male	617	24 5/16

SPECIFICATIONS

Part #	IBJ Splines	OBJ Splines	ABS Count	IBJ Type	Comp. Length MM	Comp. Length Inch
95102	27	25	44	Male	949	37 6/16
95103	27	25	44	Male	630	24 13/16
95104	27	25	44	Male	937	36 14/16
95399	27	25	0	Male	589	23 3/16
95501	27	25	44	Male	621	24 7/16
95502	27	25	44	Male	943	37 2/16
95503	27	25	42	Male	624	24 9/16
95504	27	25	42	Male	942	37 1/16
95507	27	25	42	Male	623	24 8/16
95653	27	0	46	Bolt On	656	25 13/16
95871	29	0	0	Bolt On	615	24 3/16
95872	29	0	0	Bolt On	664	26 2/16
96202	24	26	42	Female	565	22 4/16
96230	17	0	0	NO IB	474	18 11/16
96501	24	34	42	Male	613	24 2/16
96502	24	34	42	Male	890	35 1/16
96504	24	34	42	Male	924	36 6/16
96508	17	17	0	Male	1032	40 10/16
96571	22	34	0	Male	564	22 3/16
96572	22	34	0	Male	917	36 2/16
96573	22	34	0	Male	608	23 15/16
96574	22	34	0	Male	877	34 8/16
96575	17	17	0	Male	619	24 6/16
96576	17	17	0	Male	606	23 14/16
96580	22	34	0	Male	885	34 13/16
96581	17	17	0	Male	969	38 2/16
96582	17	17	0	Male	550	21 10/16
96585	17	17	0	Male	607	23 14/16
96586	17	17	0	Male	590	23 4/16
97101	33	34	47	Male	591	23 4/16
97102	33	34	47	Male	926	36 7/16
97103	33	34	47	Male	613	24 2/16
97104	33	34	47	Male	928	36 9/16
97105	25	22	42	Female	594	23 6/16
97107	25	26	42	Male	592	23 5/16
97108	25	26	42	Female	619	24 6/16
97109	25	26	42	Male	592	23 5/16
97110	25	26	42	Female	568	22 6/16
97112	25	26	42	Female	568	22 6/16
97113	26	26	0	Male	610	24
97117	25	26	42	Male	594	23 6/16
97118	25	26	42	Female	570	22 7/16
97119	26	26	0	Male	592	23 5/16
97137	25	22	0	Female	553	21 12/16
97138	25	22	0	Female	546	21 8/16
97334	25	26	42	Male	624	24 9/16
97471	30	27	0	Male	624	24 9/16
97572	26	26	0	Male	600	23 10/16
97573	26	22	0	Male	597	23 8/16
97574	26	26	0	Male	603	23 12/16
97811	25	22	42	Male	606	23 14/16
97812	25	22	42	Male	885	34 13/16
97871	26	0	0	Bolt On	534	21
97873	26	0	0	Bolt On	492	19 6/16
97881	22	25	42	Female	631	24 13/16
97882	25	22	42	Female	610	24
97883	25	22	42	Male	593	23 6/16
97887	25	22	0	Male	600	23 10/16
97888	25	22	0	Female	580	22 13/16
97901	26	0	0	Bolt On	535	21 1/16
98100	28	0	0	Bolt On	630	24 13/16
98101	28	26	0	Male	619	24 6/16
98102	28	28-2	0	Female	550	21 10/16
98103	28	28	0	Male	637	25 1/16
98104	28	28-2	0	Female	591	23 4/16
98107	28	28	0	Male	619	24 6/16
98108	36	26	0	Male	573.5	22 9/16
98109	36	28-2	0	Female	501	19 12/16
98110	36	28	0	Male	588	23 2/16
98111	36	28-2	0	Female	534	21
98112	36	28	0	Male	572	22 8/16
98117	28	28	44	Male	645	25 6/16
98118	28	28-2	44	Female	600	23 10/16
98119	31	30	44	Male	611	24 1/16
98120	31	31-2	44	Female	558	21 15/16
98183	26	26	0	Male	747	29 7/16
98196	28	30	44	Male	608	23 15/16
98198	28	28-2	44	Female	545	21 7/16
98202	28	28-2	90	Female	552	21 12/16
98204	28	28-2	44	Female	576	22 11/16
98208	26	26-2	90	Female	554	21 13/16
98213	26	28	44	Male	622	24 8/16
98214	26	28-2	44	Female	596	23 7/16
98261	28	28-2	0	Female	556	21 14/16
98263	28	28-2	0	Female	582	22 15/16
98274	28	28-2	44	Female	600	23 10/16
98278	27	27-1	0	Female	516	20 5/16
98283	31	31	44	Male	1029	40 8/16
98285	31	31	44	Male	643	25 5/16
98301	28	28-2	44	Female	567	22 5/16
98303	26	26-2	44	Female	479	18 14/16
98304	26	26	44	Male	549	21 10/16
98319	28	30	0	Male	610	24
98371	26	26-2	0	Female	478	18 13/16
98372	26	26	0	Male	548	21 9/16
98373	26	26-2	0	Female	541	21 5/16
98374	26	26	0	Male	606	23 14/16
98501	28	31	44	Male	588	23 2/16
98503	28	35	44	Male	675	26 9/16
98507	28	28	44	Male	628	24 12/16
98509	26	26	90	Male	604	23 12/16
98511	28	28	90	Male	610	24
98513	26	24	44	Male	636	25 1/16
98514	26	28-2	44	Female	582	22 15/16
98517	26	24	44	Male	916	36 1/16
98558	28	0	0	Bolt On	625	24 10/16
98571	24	24	0	Male	890	35 1/16
98573	28	28	44	Male	645	25 6/16
98577	27	27	0	Male	586	23 1/16
98601	28	30	44	Male	639	25 3/16
98602	28	28-2	44	Female	572	22 8/16
98603	28	30	44	Male	613	24 2/16
98605	31	30	44	Male	646	25 7/16
98606	31	28-2	44	Female	596	23 7/16
98607	28	28	44	Male	651	25 10/16
98608	28	28-2	44	Female	590	23 4/16
98609	26	26	44	Male	608	23 15/16
98610	26	28-2	44	Female	591	23 4/16
98611	26	24	44	Male	632	24 14/16
98613	26	28	44	Male	626	24 10/16
98617	28	28	44	Male	622	24 8/16
98618	28	28-2	44	Female	582	22 15/16
98672	24	24	0	Male	609	24
98673	26	26	0	Male	597	23 8/16
98674	26	26-2	0	Female	548	21 9/16
98707	28	30	44	Male	645	25 6/16
98800	31	0	48	Bolt On	686	27

CARTEK® AUTOPARTES

www.cartek.com.mx

EN NUESTRA PÁGINA ENCONTRARÁS

INFORMACIÓN **DE PRODUCTOS CARTEK®**

Sistemas Automotrices

Afinación | Diferencial | Embrague | Enfriamiento | Entrega de Combustible | Frenos | Ignición y Eléctrico | Lubricantes, Químicos y Aditivos | Motor | Rodamientos | Suspensión y Dirección | Tracción Delantera | Transmisión | Visibilidad

BOLETINES **TÉCNICOS**

CATÁLOGOS **CARTEK**

Like en

facebook.com/cartek.autopartes

CARTEK®
AUTOPARTES

La Línea Más Completa
de Autopartes en México®

FLECHA COMPLETA 100% NUEVA

- Roscas y ranuras redondeadas de alta precisión para una instalación fácil y rápida
- Cojinetes, anillos guía y carcasa tratados térmicamente que igualan o superan las especificaciones originales, para una mayor vida útil
- Sellos y superficies de precisión para una mayor vida útil
- Su ajuste, forma y desempeño igualan o superan las piezas originales

ISO/TS 16949:2002

Juntas Homocinéticas

www.cartek.com.mx

facebook.com/cartek.autopartes

CARTEK SERVICIO TECNICO

01800CARTEKS
018002278357

® Marcas Registradas usadas bajo licencia otorgada por su titular, Libertad No. 39 Interior 6, Colonia Mexicaltzingo, C.P. 44180, Guadalajara, Jalisco.